*SPARACO & YOUNGBLOOD, PLLC*
*CIVIL ENGINEERING * LAND SURVEYING * SITE PLANNING*
*P.O. Box #818; 18 N. Main Street Harriman, N.Y. 10926*
*(845) 782-8543 Fax (845) 782-5901*
*sparaco.steve@selsny.com*
*wdyls1@gmail.com*

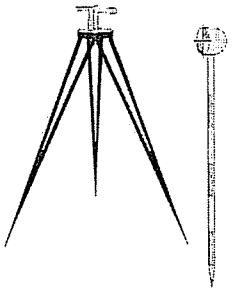

# DRAINAGE REPORT

# PROJECT: OAK TREE

# JOB #: SY #1385

# REV. DATE: 2-6-20

*SPARACO & YOUNGBLOOD, PLLC*
*CIVIL ENGINEERING * LAND SURVEYING * SITE PLANNING*
*P.O. Box #818; 18 N. Main Street Harriman, N.Y. 10926*
*(845) 782-8543 Fax (845) 782-5901*
*sparaco.steve@selsny.com*
*wdyls1@gmail.com*

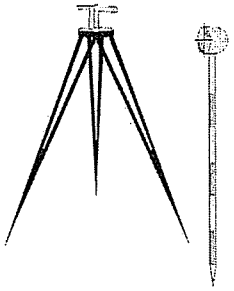

February 6, 2020

Planning Board
Town of Haverstraw
1 Rosman Road
Garnerville NY 10923

Att: Annette Hendrie, Chief Clerk to Planning Board

Re: Drainage Narrative (SY#1385)
1-72 Oak Tree Lane and 22 Rosman Road, Haverstraw, NY 10962
Tax Lots # 26.05-1-42 & 26.09-2-8

Dear Ms. Hendrie:

We have prepared a hydrologic analysis of the 14.3-acre Oak Tree project located as described above in the Town of Haverstraw, NY.

The scope of the Oak Tree project includes the demolition of the existing structures and pavement on site and redeveloped with a site plan for a 228 unit apartment complex containing a boulevard entrance and loop road with connector access and provision of 470 parking spaces at the subject site.

This project proposes a development disturbance area greater than an acre of disturbance, and therefore must meet state mandated requirements for water quality and "green" infrastructure best management practices.

We have reviewed the Rockland County Soil Survey conditions for this area and also performed deep hole and percolation testing and it appears that the soils where the Easterly drainage systems will be located will be amenable to underground infiltration/detention system designs. Our staff witnessed deep hole and percolation testing throughout the two sites on 10-30-18, 11-29-18 and 11-31-17. Areas throughout the site comprised of Fine and Gravelly Sandy Loams throughout the site. Areas tested in the Easterly half of the site were tested and witnessed by our staff indicated adequate permeability rates. Some areas tested in the Westerly portion of the site were not suitable for infiltration.

We have determined that drainage on this site generally drains in three different directions offsite and are indicated on the drainage area plans enclosed in the appendix.

Drainage discharges toward Study Points #1 & #2 consist of areas that drain to the North and West and eventually toward an apartment complex in an RG zone in the Town of Haverstraw and also lands owned by Suez Water to the West and North of the site.

Drainage discharges toward Study Points #3 & #4 consist of areas that drain to the North and East to a 36-inch RCP (Pt. 3) and eventually to a catchbasin located at the Northeasterly corner of Barnes Avenue (Pt. 4) in the Town of West Haverstraw.

Two separate stormwater attenuation systems have been proposed on site to mitigate against increases in discharge offsite in addition to providing water quality benefits in accordance with NYSDEC Stormwater regulations for all the new development on site.

Discharges to the Northwesterly end of the site (Sub-area "Site-1A") will be mitigated via a reduction in total area in this direction, thus yielding reduced flows in developed conditions. However this area will still require that water quality compliance be provided. This will be achieved through a combination of vegetated swales and also a water quality filter (to be designed under separate cover) that will be proposed in conjunction with an underground storage system in this area. The system will consist of fourteen (14) Stormtech MC-4500 units with an outlet control structure for routing purposes and will be controlled by a 3-inch diameter control orifice and 3.93-foot (15-inch diameter pipe overflow) wide service spillway weir. This system eventually will discharge to a 50-foot long level spreader and then overflow toward the existing apartment complex property to the West and Suez Water parcel to the North.

Discharges to the Southwesterly area on site (Sub-area "Site-2) will be mitigated by a reduction in total area in this direction, thus yielding reduced flows in developed conditions. Envirohood in line oil water separators will be provided for all catchbasins in this area as well as the rest of the site. Details to be provided in the site plan set prior to final approval.

Discharges to the Northeasterly end of the site (Sub-area "Site-5A") will be mitigated via a proposed underground retention/detention system in this area for water quality purposes and will require one hundred forty (140) Stormtech MC-4500 units with an outlet control structure for routing purposes. A 14-minute percolation rate for this area was determined during field testing performed on 11-29-18 and incorporated in our design along with a 4.5-inch diameter control orifice and a 4.71-foot (18-inch diameter overflow) wide service spillway weir. This system overflows toward the larger above ground infiltration/detention basin just to the South and East of this system.

Discharges to the Southeasterly end of the site (Sub-areas "Site-3A" & "Site-4") will be mitigated via a proposed above ground retention/detention system in this area and will be controlled by a proposed outlet structure prior to release of storm flows offsite. The pond will include water quality elements including a forebay for pre-treatment purposes and a sand filter for water quality purposes and will also function as a detention basin for discharges greater than the 1-year design storm. A 28-minute percolation rate for this area was determined during field testing performed on 11-29-18 and incorporated in our design along with 3.5-inch and 8-inch diameter control orifii and a 3.0-foot wide service spillway weir.

A full Storm Water Pollution Prevention Plan (SWPPP) will be required for this project. We will submit a full SWPPP at a later date prior to final approval. Our preliminary calculations enclosed herein indicate that compliance can readily be achieved with the current design.

Our analysis includes storms ranging from the 1-year to the 100-year design. Refer to the Summary Table below for a comparison of Existing and Developed Conditions Discharges from the site.

**Summary Table # 1 – Oak Tree drainage to the Northwest (Pt. #1) for Existing and Developed Conditions:**

| | Storm Frequency (in years) | | | | | |
|---|---|---|---|---|---|---|
| **Conditions** | **1** | **2** | **5** | **10** | **25** | **100** |
| Pre-Dev. Discharges (cfs) | 2.28 | 4.27 | 7.30 | 9.18 | 12.14 | 22.48 |
| Post-Dev. Discharges (cfs) | 0.91 | 1.76 | 3.04 | 4.12 | 6.68 | 11.92 |
| Net Change: | -1.37 | - 2.51 | - 4.26 | - 5.06 | - 5.46 | - 10.56 |

**Summary Table # 2 – Oak Tree drainage to the Southwest (Pt. #2) for Existing and Developed Conditions:**

| | Storm Frequency (in years) | | | | | |
|---|---|---|---|---|---|---|
| **Conditions** | **1** | **2** | **5** | **10** | **25** | **100** |
| Pre-Dev. Discharges (cfs) | 0.25 | 0.47 | 0.78 | 0.96 | 1.23 | 2.11 |
| Post-Dev. Discharges (cfs) | 0.22 | 0.37 | 0.57 | 0.68 | 0.84 | 1.36 |
| Net Change: | - 0.03 | - 0.10 | - 0.21 | - 0.28 | -0.39 | - 0.75 |

**Summary Table # 3 – Oak Tree and offsite drainage to the East (Pt. #3) to a field inlet conveying discharges through an existing 36-inch RCP toward Barnes Avenue for Existing and Developed Conditions:**

| | Storm Frequency (in years) | | | | | |
|---|---|---|---|---|---|---|
| **Conditions** | **1** | **2** | **5** | **10** | **25** | **100** |
| Pre-Dev. Discharges (cfs) | 11.95 | 19.43 | 29.95 | 36.30 | 45.62 | 75.83 |
| Post-Dev. Discharges (cfs) | 9.69 | 15.19 | 22.90 | 27.30 | 33.70 | 73.67 |
| Net Change: | - 2.26 | - 4.24 | - 7.05 | - 9.00 | - 11.92 | - 2.16 |

**Summary Table # 4 – Oak Tree and offsite drainage toward the Northeast (Pt. #4) to a common municipal drainage point (Curb Inlet) at the NE corner of Barnes Avenue for Existing and Developed Conditions:**

| | Storm Frequency (in years) | | | | | |
|---|---|---|---|---|---|---|
| **Conditions** | **1** | **2** | **5** | **10** | **25** | **100** |
| Pre-Dev. Discharges (cfs) | 16.12 | 27.58 | 44.98 | 55.27 | 70.59 | 121.08 |
| Post-Dev. Discharges (cfs) | 12.85 | 21.67 | 34.43 | 41.90 | 53.01 | 102.91 |
| Net Change: | -3.27 | - 5.91 | - 10.55 | - 13.37 | - 17.58 | - 18.17 |

Attached are drainage area maps, drainage calculations and backup Hec-1 output data in support of our analysis.

Very truly yours,

SPARACO & YOUNGBLOOD, PLLC

Steve Sparaco, P.E.

cc.: client

# ***TABLE OF CONTENTS:***


*Appendix:*

*1.) Methodology*
*2.) Figure #A: Existing Offsite Conditions Drainage Area Map at 1"=50' scale*
*3.) Figure #B: Existing Conditions Drainage Area Map at 1"=50' scale*
*4.) Figure #C: Developed Conditions Drainage Area Map at 1"=50' scale*
*5.) Site Deep Hole and Percolation Results (Refer to Figure "C" for locations)*
*6.) Rockland County Soils Information*
*7.) Curve Number Calculations*

*Water Quality Analysis Backup Calculations:*

- *Reference: Exhibit 4-III: Unit Peak Discharge (qu) for SCS type III rainfall distribution (from TR-55 manual)*
- *Reference: Figure 8.5 Detention Time vs. Discharge Ratios (from NYSDEC Water Quality Manual)*

*The following Data provided for Subareas "Site-1A"," Site-5A" & "Site-3A"):*

*1.) Title Sheet*
*2.) Plan Views and Details for each Detention System*
*3.) Peak Discharge Calculations*
*4.) Volume Calculations*
*5.) Summary Table WQ-1: Water Quality Calculations*
*6.) Summary Table WQ-2: Runoff Reduction Volume Calculations*
*7.) Channel Protection Calculations*
*8.) Elevation vs. Discharge Summary Chart*

*Hec-1 Analyses:*

*1.) Existing Conditions Hec-1 Model*
*2.) Developed Conditions Hec-1 Model*

**ENGINEERING METHODOLOGY:**

*Area Hydrology:*

We have prepared a hydrologic analysis of the 14.3-acre Oak Tree project located as described above in the Town of Haverstraw, NY.

*Methodology:*

Four study points where discharges exit the site were analyzed (Study Point 1 through 4 -see attached drainage area maps) to evaluate site runoff under pre- and post- development conditions.

All drainage area delineations and any changes from existing to proposed conditions are indicated graphically on Drainage Area Maps provided in the Appendix.

A hydrologic analysis was performed utilizing procedures outlined in the Soil Conservation Service (SCS) publication Technical Report 55 (TR-55). SCS hydrographs were developed utilizing hydrographs consisting of a 24-hour rainfall event using an SCS Type-III rainfall distribution and unit hydrograph parameters, including drainage area, curve number (CN), time of concentration, and percent impervious.

Time of concentration travel paths on site were insignificant and diminimus as they pertain to this project upon review of the area hydrology thru this site. A 10-minute minimum was used for existing conditions and a 5-minute minimum time of concentration was used for proposed conditions for all developed subareas on site. A 6-minute lag time from the site and discharges collected at the 36-inch RCP at (Study Point #3) to the NE catchbasin at Barnes Avenue (Study Point #4) was utilized for existing and developed conditions in this model.

Curve number calculations were based on hydrologic soil data obtained from available Rockland County Soils Maps. Refer to the Appendix for supporting soils data.

The Army Corps of Engineers hydrologic analysis computer program HEC-1 was utilized to generate runoff hydrographs for the 1, 2, 5, 10, 25 and 100-year frequency storms for pre and post-development conditions. This program was also utilized to perform hydrograph routings and additions to design the required mitigative facilities for developed conditions.

Stormwater Analysis and proposed mitigation:

The scope of the Oak Tree project includes the demolition of the existing structures and pavement on site and redeveloped with a site plan for a 228 unit apartment complex containing a boulevard entrance and loop road with connector access and provision of 470 parking spaces at the subject site.

This project proposes a development disturbance area greater than an acre of disturbance, and therefore must meet state mandated requirements for water quality and "green" infrastructure best management practices.

We have reviewed the Rockland County Soil Survey conditions for this area and also performed deep hole and percolation testing and it appears that the soils where the Easterly drainage systems will be located will be amenable to underground infiltration/detention system designs. Our staff witnessed deep hole and percolation testing throughout the two sites on 10-30-18, 11-29-18 and 11-31-17. Areas throughout the site comprised of Fine and Gravelly Sandy Loams throughout the site. Areas tested in the Easterly half of the site were tested and witnessed by our staff indicated adequate permeability rates. Some areas tested in the Westerly portion of the site were not suitable for infiltration.

We have determined that drainage on this site generally drains in three different directions offsite and are indicated on the drainage area plans enclosed in the appendix.

Drainage discharges toward Study Points #1 & #2 consist of areas that drain to the North and West and eventually toward an apartment complex in an RG zone in the Town of Haverstraw and also lands owned by Suez Water to the West and North of the site.

Drainage discharges toward Study Points #3 & #4 consist of areas that drain to the North and East to a 36-inch RCP (Pt. 3) and eventually to a catchbasin located at the Northeasterly corner of Barnes Avenue (Pt. 4) in the Town of West Haverstraw.

Two separate stormwater attenuation systems have been proposed on site to mitigate against increases in discharge offsite in addition to providing water quality benefits in accordance with NYSDEC Stormwater regulations for all the new development on site.

Discharges to the Northwesterly end of the site (Sub-area "Site-1A") will be mitigated via a reduction in total area in this direction, thus yielding reduced flows in developed conditions. However this area will still require that water quality compliance be provided. This will be achieved through

a combination of vegetated swales and also a water quality filter (to be designed under separate cover) that will be proposed in conjunction with an underground storage system in this area. The system will consist of fourteen (14) Stormtech MC-4500 units with an outlet control structure for routing purposes and will be controlled by a 3-inch diameter control orifice and 3.93-foot (15-inch diameter pipe overflow) wide service spillway weir. This system eventually will discharge to a 50-foot long level spreader and then overflow toward the existing apartment complex property to the West and Suez Water parcel to the North.

Discharges to the Southwesterly area on site (Sub-area "Site-2) will be mitigated by a reduction in total area in this direction, thus yielding reduced flows in developed conditions. Envirohood in line oil water separators will be provided for all catchbasins in this area as well as the rest of the site. Details to be provided in the site plan set prior to final approval.

Discharges to the Northeasterly end of the site (Sub-area "Site-5A") will be mitigated via a proposed underground retention/detention system in this area for water quality purposes and will require one hundred forty (140) Stormtech MC-4500 units with an outlet control structure for routing purposes. A 14-minute percolation rate for this area was determined during field testing performed on 11-29-18 and incorporated in our design along with a 4.5-inch diameter control orifice and a 4.71-foot (18-inch diameter overflow) wide service spillway weir. This system overflows toward the larger above ground infiltration/detention basin just to the South and East of this system.

Discharges to the Southeasterly end of the site (Sub-areas "Site-3A" & "Site-4") will be mitigated via a proposed above ground retention/detention system in this area and will be controlled by a proposed outlet structure prior to release of storm flows offsite. The pond will include water quality elements including a forebay for pre-treatment purposes and a sand filter for water quality purposes and will also function as a detention basin for discharges greater than the 1-year design storm. A 28-minute percolation rate for this area was determined during field testing performed on 11-29-18 and incorporated in our design along with 3.5-inch and 8-inch diameter control orifii and a 3.0-foot wide service spillway weir.

A full Storm Water Pollution Prevention Plan (SWPPP) will be required for this project. We will submit a full SWPPP at a later date prior to final approval. Our preliminary calculations enclosed herein indicate that compliance can readily be achieved with the current design.

*Soils Information:*

*1.) Deep hole and Percolation Testing*
*2.) Rockland County Soils Information*

Sparaco Engineering and Land Surveying PC
26 Fireman Memorial Drive - Suite 210
Pomona, NY 10970

Phone: (845) 362-1966
Fax: (845) 362-1987
Email: info@selsny.com

# Test Hole Log

Site: Oak Tree
Job # SY-1385
Date: 11/29/18
Name: Sean Kinsley / Bill Johnson

Weather Cond.: Partly Cloudy

Sheet No: 1 | 2

| DEPTH FEET | DEPTH INCHES | TEST HOLE #1 | TEST HOLE #2 | TEST HOLE #3 | TEST HOLE #4 | TEST HOLE #5 | TEST HOLE #7 |
|---|---|---|---|---|---|---|---|
| 1 | 3 | Humus | Humus | Humus | Blacktop | Humus | Humus |
| | 6 | | | | | | |
| | 9 | | Sandy Loam | | Loam | Loam | Loam |
| | 12 | | | | | | |
| 2 | 15 | Dark Loam | | Sandy Loam | | Gravelly Loam w/ Some Boulders | Some Bould. Hard |
| | 18 | | | | | | |
| | 21 | | | | | | |
| | 24 | | | | | | |
| 3 | 27 | | | | | | |
| | 30 | | | | | | |
| | 33 | | | | | | |
| | 36 | | | | | | |
| 4 | 39 | 46" Seepage | Grey Clay Loam w/ Boulds, | | | | |
| | 42 | | | | | | |
| | 45 | | | | | | |
| | 48 | | | | | | |
| 5 | 51 | | | | | | |
| | 54 | | | | | | |
| | 57 | | | | Silty Loam Hard | | |
| | 60 | | | | | | |
| 6 | 63 | Sandy Clay | | Humus | | | |
| | 66 | | | | | | |
| | 69 | | | Gravelly Loam | | | |
| | 72 | | | | | | |
| 7 | 75 | | | | | | |
| | 78 | | | | | | |
| | 81 | | | | | | |
| | 84 | 85" Boulders Some | | | | | |
| PERC. RATE | | | | | | | |
| DEPTH TO G. W. | | | | | | | |

Notes:

Sparaco Engineering and Land Surveying PC
26 Fireman Memorial Drive - Suite 210
Pomona, NY 10970

Phone: (845) 362-1966
Fax: (845) 362-1987
Email: info@selsny.com

# Test Hole Log

Site: Oak Tree
Job # SY-1385
Date: 10/29/18
Name: WMT & SK

Weather Cond.: CLOUDY 50°

Sheet No: 2 | 2

| DEPTH FEET | DEPTH INCHES | TEST HOLE 1 | TEST HOLE 2 | TEST HOLE 3 | TEST HOLE #4 | TEST HOLE #5 | TEST HOLE #7 |
|---|---|---|---|---|---|---|---|
| 8 | 87 | Sandy Clay | PERC. | PERC. RQ. D | PERC. | PERC. | PERC. |
| | 90 | | | | | | |
| | 93 | | | | | | |
| | 96 | | | | | | |
| 9 | 99 | | | | | | |
| | 102 | | | | | | |
| | 105 | Rock Test | | | | | |
| | 108 | | | | | | |
| 10 | 111 | Gravelly loam w/Boulders | | | | | |
| | 114 | | | | | | |
| | 117 | | | | | | |
| | 120 | | | | | | |
| 11 | 123 | | | | | | |
| | 126 | | | | | | |
| | 129 | | | | | | |
| | 132 | | | SAND | | | |
| 12 | 135 | | | | | | |
| | 138 | | | | | | |
| | 141 | | | | | | |
| | 144 | | | | | | |
| 13 | 147 | | BOT. NO WATER OR ROCK | BOT. NO ROCK OR WATER | BOT. NO ROCK NO WATER | Bot. No Rock No Water | BOT. NO ROCK NO WATER |
| | 150 | | | | | | |
| | 153 | | | | | | |
| | 156 | | | | | | |
| 14 | 159 | Bot. No Rock No Water | | | | | |
| | 162 | | | | | | |
| | 165 | | | | | | |
| | 168 | | | | | | |
| PERC. RATE | | | | | | | |
| DEPTH TO G. W. | | | | | | | |

Notes:

NEW YORK STATE DEPARTMENT OF HEALTH

Bureau of Community Sanitation and Food Protection

## Percolation Test Data

See instructions on reverse side.

Development/Site: Oak Tree (T/V/C) County: Rockland

Date: 11/29/18 Test Conducted By: Sean Kinsley

| Test Hole No. | Test Hole Depth (Inches) | Lot No. | Soil Profile | Presoaking Date & Time | Time | Percolation Test Runs 1 | 2 | 3 | 4 | 5 | 6 |
|---|---|---|---|---|---|---|---|---|---|---|---|
| #1 | 114" | | See Soil log | 3" above Top Nail 10:15 | END | | | | | | |
| | | | | | BEGIN | | | | | | |
| | | | | | RESULT | N.G. | | | | | |
| #2 | 96" | | " " " | 2" above Tack 10:45 | END | 11:34 | 11:57 | 12:27:40 | 12:57:45 | | |
| | | | | | BEGIN | 11:07 | 11:35 | 12:00:00 | 12:30:35 | | |
| | | | | | RESULT | 27min | 22min | :27:40 | :27:10 | | |
| #3 | 96" | | " " " | 2" above tak 11:15 | END | 11:20 | 11:26 | 11:32 | 11:39 | 11:46:30 | |
| | | | | | BEGIN | 11:17 | 11:22 | 11:28 | 11:34 | 11:41:15 | |
| | | | | | RESULT | 3min | 4min | 4min | 5min | 5:15 | 14:51:05 |
| #4 | 96" | | See Soil Log | 1" above Tac 1:40 | END | 13:47:45 | 13:58:30 | 14:08:10 | 14:22:45 | 14:34:25 | ~~14:58:05~~ |
| | | | | | BEGIN | 13:43:30 | 13:52:20 | 14:01:05 | 14:14:35 | 14:25:00 | 14:41:45 |
| | | | | | RESULT | :4:15 | :6:10 | :7:05 | :8:10 | :9:25 | 9:20 |
| #5 | 96" | | " " " | 2" above Tac 13:55 | END | 14:34:50 | 14:52:25 | 15:09:25 | | | |
| | | | | | BEGIN | 14:21:05 | 14:38:40 | 14:55:35 | | | |
| | | | | | RESULT | :13:45 | 13:45 | :13:50 | | | |
| #7 | 96" | | " " " Timed by Stopwatch | 2" above Tac Soak | END | : : | | | | | |
| | | | | | BEGIN | 15:27:05 | | | | | |
| | | | | | RESULT | N.G. | | | | | |

1. Begin time, end time and result in mintes for a water elevation change from 6" to 5" above the bottom of the test hole.

Sparaco Engineering and Land Surveying PC
26 Fireman Memorial Drive - Suite 210
Pomona, NY 10970

Phone: (845) 362-1966
Fax: (845) 362-1987
Email: info@selsny.com

# Test Hole Log

Site: OAKTREE
Job #: SY-1385
Date: 10/30/18
Name: WMJ & SK

Weather Cond.: CLEAR 40°

Sheet No: 1 | 2

| DEPTH FEET | DEPTH INCHES | TEST HOLE #6 | TEST HOLE #8 | TEST HOLE #9 | TEST HOLE #10 | TEST HOLE #17 | TEST HOLE #19 |
|---|---|---|---|---|---|---|---|
| 1 | 3 | HUMUS | HUMUS | HUMUS | HUMUS | HUMUS | HUMUS |
| | 6 | | | | | SANDY LOAM | |
| | 9 | | FILL | BROWN LOAM | | | SANDY LOAM |
| | 12 | | | | SANDY LOAM | | |
| 2 | 15 | | | | | | |
| | 18 | | | | | | |
| | 21 | FILL TOPSOIL & BOULDERS | | | | | |
| | 24 | | GREY SILT LOAM & HARD SOME BOULDERS | | | | PERC |
| 3 | 27 | | | | | | |
| | 30 | | | | | | |
| | 33 | | | SILT LOAM HARD ROCKY | | | |
| | 36 | | | | | | |
| 4 | 39 | | | | | SILT LOAM SOME BOULDERS | SILT LOAM SOME BOULDERS |
| | 42 | | | | | | |
| | 45 | | | | | | |
| | 48 | | | | | | |
| 5 | 51 | CLAY LOAM | | | | | |
| | 54 | | | | | | |
| | 57 | | | | | PERC | |
| | 60 | | | | SILT LOAM HARD | | |
| 6 | 63 | | | | | | |
| | 66 | | | | | | |
| | 69 | | | | | | |
| | 72 | | | | | | |
| 7 | 75 | | | | | | BOT. IN ROCK NO WATER |
| | 78 | | | | | | |
| | 81 | | | | | | |
| | 84 | | | | | | |
| PERC. RATE | | | | | | | |
| DEPTH TO G. W. | | | | | | | |

Notes:

Sparaco Engineering and Land Surveying PC
26 Fireman Memorial Drive - Suite 210
Pomona, NY 10970

Phone: (845) 362-1966
Fax: (845) 362-1987
Email: info@selsny.com

# Test Hole Log

Site: OAKTREE
Job # SY-1385
Date: 10/30/18
Name: WMJ & SK

Weather Cond.: CLEAR 40°

Sheet No: 2 | 2

| DEPTH FEET | DEPTH INCHES | TEST HOLE #6 | TEST HOLE #8 | TEST HOLE #9 | TEST HOLE #10 | TEST HOLE #17 | TEST HOLE |
|---|---|---|---|---|---|---|---|
| 8 | 87 | SILT LOAM | PERC | | | | |
| | 90 | | PERC | | | | |
| | 93 | | | | | | |
| | 96 | | | | | | |
| 9 | 99 | | | | | | |
| | 102 | | | | | | |
| | 105 | | | | | | |
| | 108 | | | | | | |
| 10 | 111 | | | | | SEEP | |
| | 114 | | | | | | |
| | 117 | | | | | | |
| | 120 | | | | | | |
| 11 | 123 | | | | | | |
| | 126 | | | | | | |
| | 129 | | | | | | |
| | 132 | | | | | | |
| 12 | 135 | | | | | WET | |
| | 138 | | | | | | |
| | 141 | | | | | | |
| | 144 | | | | | | |
| 13 | 147 | NO ROCK NO WATER | | NO ROCK NO WATER | NO ROCK NO WATER | NO ROCK | |
| | 150 | | | | | | |
| | 153 | | | | | | |
| | 156 | | | | | | |
| 14 | 159 | | NO ROCK NO WATER | | | | |
| | 162 | | | | | | |
| | 165 | | | | | | |
| | 168 | | | | | | |
| PERC. RATE | | | | | | | |
| DEPTH TO G. W. | | | | | | | |

Notes:

NEW YORK STATE DEPARTMENT OF HEALTH

Bureau of Community Sanitation and Food Protection

Percolation Test Data

See instructions on reverse side

Development/Site: Oak Tree (T/V/C) County: Rockland

Date: 11/30/18 Test Conducted By: Sean Kinsley

| Test Hole No. | Test Hole Depth (Inches) | Lot No. | Soil Profile | Presoaking Date & Time | Time | Percolation Test Runs 1 | 2 | 3 | 4 | 5 | 6 |
|---|---|---|---|---|---|---|---|---|---|---|---|
| #6 | 96" | | See Soil Log | 2" above 10:21 | END | | | | | | |
| | | | | | BEGIN | | | | | | |
| | | | | | RESULT | N.G. | | | | | |
| #8 | 96" | | " " " | .2 above 11:21 | END | | | | | | |
| | | | | | BEGIN | | | | | | |
| | | | | | RESULT | N.G. | | | | | |
| #9 | 96" | | " " " | .2 above 11:40 | END | 13:08:45 | 13:47:00 | 13:47:00 | 14:29:50 | | |
| | | | | | BEGIN | 12:37:00 | 13:11:55 | 13:11:55 | 13:53:30 | | |
| | | | | | RESULT | :31:45 | :36:05 | :36:05 | :36:20 | | |
| #10 | 96" | | " " " | 1½" Above 12:01 | END | 12:59:00 | 13:08:46 | 13:36:55 | 14:26:40 | 15:30:25 | |
| | | | | | BEGIN | 12:22:50 | 12:51:55 | 12:57:55 | 13:39:10 | 14:36:20 | |
| | | | | | RESULT | :36:10 | :10:50 | :39:00 | 13:30 | 54:05 | N.G. |
| #17 | ~~96"~~ 72" | | " " " | 2" Above 13:16 | END | | | 39:00 | | | |
| | | | | | BEGIN | | | | | | |
| | | | | | RESULT | N.G. | | | | | |
| #19 | 36" | | " " " | 2" Above 13:48 | END | | | | | | |
| | | | | | BEGIN | | | | | | |
| | | | | | RESULT | N.G. | | | | | |

1. Begin time, end time and result in mintes for a water elevation change from 6" to 5" above the bottom of the test hole.

Sparaco Engineering and Land Surveying PC
26 Fireman Memorial Drive - Suite 210
Pomona, NY 10970
Phone: (845) 362-1966
Fax: (845) 362-1987
Email: info@selsny.com

# Test Hole Log

Site: Oak Tree
Job # SY-1385
Date: 11/31/18
Name: Sean Kinsley / Bill Johnson

Weather Cond.:

Sheet No: 1 | 2

| DEPTH FEET | DEPTH INCHES | TEST HOLE #14 | TEST HOLE #13 | TEST HOLE #12 | TEST HOLE #11 | TEST HOLE #15 | TEST HOLE #20 |
|---|---|---|---|---|---|---|---|
| 1 | 3 | Humus | Humus | Humus | Humus | Humus | Humus |
| | 6 | Fill w/ Cobbley Loamy | | Sandy Loam Fill | | | |
| | 9 | | | | | Loam Fill | |
| | 12 | | | | | | |
| 2 | 15 | | Clay Loam | | Loam Fill | | |
| | 18 | | | Humus | | | |
| | 21 | | | | | Clay Loam w/ Boulders HARD | Clay Loam |
| | 24 | | | | | | |
| 3 | 27 | | | Perc. | | | |
| | 30 | Humus | | | | | |
| | 33 | | | | | | |
| | 36 | | Silt Loam w/ Cobbles | | | | |
| 4 | 39 | Clay Loam | | | Sand | | |
| | 42 | | | Clay Loam | | | |
| | 45 | | | | | | |
| | 48 | | | | | | |
| 5 | 51 | | | | | | |
| | 54 | | | | | | |
| | 57 | | | | | | |
| | 60 | | | | | | |
| 6 | 63 | | | | Perc. | | |
| | 66 | | | | | | |
| | 69 | | | | | | |
| | 72 | Loam | | | | | |
| 7 | 75 | | | Bot. No Rock No Water | | | |
| | 78 | | | | | | |
| | 81 | | | | | | |
| | 84 | | | | | | |
| PERC. RATE | | | | | | | |
| DEPTH TO G. W. | | | | | | | |

Notes:

Sparaco Engineering and Land Surveying PC
26 Fireman Memorial Drive - Suite 210
Pomona, NY 10970
Phone: (845) 362-1966
Fax: (845) 362-1987
Email: info@selsny.com

# Test Hole Log

Site: Oak Tree
Job # SY-1385
Date: 11/31/18
Name: Sean Kinsley / Bill Johnson
Weather Cond.:
Sheet No: 2 | 2

| DEPTH FEET | DEPTH INCHES | TEST HOLE #14 | TEST HOLE #13 | TEST HOLE #12 | TEST HOLE #11 | TEST HOLE #15 | TEST HOLE #20 |
|---|---|---|---|---|---|---|---|
| 8 | 87 | | SOME BOULDER | SANDY LOAM | SANDY LOAM | PERC. | PERC. |
| | 90 | | | | | | |
| | 93 | | | | | | |
| | 96 | | | | | | |
| 9 | 99 | | | | | | |
| | 102 | | | | | | |
| | 105 | | | | | | |
| | 108 | | | | | | |
| 10 | 111 | | | | | | |
| | 114 | | | | | | |
| | 117 | | | | | | |
| | 120 | | | NO ROCK NO WATER | NO ROCK NO WATER | NO ROCK NO WATER | |
| 11 | 123 | | PERC. | | | | |
| | 126 | | | | | | |
| | 129 | | | | | | |
| | 132 | | | | | | |
| 12 | 135 | | | | | | |
| | 138 | | | | | | |
| | 141 | | | | | | |
| | 144 | Boulder No Rock No Water | | | | NO ROCK NO WATER | NO ROCK NO WATER |
| 13 | 147 | | | | | | |
| | 150 | | | | | | |
| | 153 | | | | | | |
| | 156 | | | | | | |
| 14 | 159 | | | | | | |
| | 162 | | | | | | |
| | 165 | | | | | | |
| | 168 | | | | | | |
| PERC. RATE | | | | | | | |
| DEPTH TO G. W. | | | | | | | |

Notes: 15' NO ROCK NO WATER

SW ① ② ③ ④

PERC. #20 3'/20

NEW YORK STATE DEPARTMENT OF HEALTH

Bureau of Community Sanitation and Food Protection

Percolation Test Data

See instructions on reverse side.

Development/Site: Oak Tree (T/V/C) County: Rockland

Date: 10/31/18 Test Conducted By: Sean Kinsley

| Test Hole No. | Test Hole Depth (Inches) | Lot No. | Soil Profile | Presoaking Date & Time | Time | Percolation Test Runs 1 | 2 | 3 | 4 | 5 | 6 |
|---|---|---|---|---|---|---|---|---|---|---|---|
| #14 | 84" | | See Soil Log | 2" Above 10:02 | END | | | | | | |
| | | | | | BEGIN | | | | | | |
| | | | | | RESULT | N.G. | | | | | |
| #13 | 132" | | " " " | 2" Above 11:00 | END | | | | | | |
| | | | | | BEGIN | | | | | | |
| | | | | | RESULT | N.G. | | | | | |
| #12 | 30" | | " " " | 2" Above 11:23 | END | 12:23:40 | 12:55:40 | 13:27:34 | | | |
| | | | | | BEGIN | 11:57:20 | 12:26:15 | 12:57:25 | | | |
| | | | | | RESULT | :26:40 | :29:25 | 30:09 | | | |
| #11 | 72" | | " " " | 2" Above 12:08 | END | | | | | | |
| | | | | | BEGIN | 13:30:15 | | | | | |
| | | | | | RESULT | N.G. | | | | | |
| #15 | 96" | | " " " | 2" Above 12:35 | END | | | | | | |
| | | | | | BEGIN | 14:02:07 | | | | | |
| | | | | | RESULT | N.G. | | | | | |
| #20 | 96" | | " " " Stopwatch | 2" Above 13:20 | END | | | | | | |
| | | | | | BEGIN | 14:01:20 | | N.G. | | | |
| | | | | | RESULT | 37:20 | 40:00 | | | | |

1. Begin time, end time and result in mintes for a water elevation change from 6" to 5" above the bottom of the test hole.

Sparaco Engineering and Land Surveying PC
26 Fireman Memorial Drive - Suite 210
Pomona, NY 10970

Phone: (845) 362-1966
Fax: (845) 362-1987
Email: info@selsny.com

# Test Hole Log

Site: OAK TREE
Job # 54-1385
Date: 10/31/18
Name: W. M. JOHNSON

Weather Cond.: CLEAR 50°

Sheet No: 1 | 2

#21

| DEPTH FEET | DEPTH INCHES | TEST HOLE | TEST HOLE | TEST HOLE | TEST HOLE | TEST HOLE | TEST HOLE |
|---|---|---|---|---|---|---|---|
| 1 | 3 | ↑ HUMUS | | | | | |
| | 6 | | | | | | |
| | 9 | ↓ | | | | | |
| | 12 | ↑ BROWN CLAY LOAM | | | | | |
| 2 | 15 | | | | | | |
| | 18 | | | | | | |
| | 21 | | | | | | |
| | 24 | | | | | | |
| 3 | 27 | ↑ GREY CLAY LOAM HARD | | | | | |
| | 30 | | | | | | |
| | 33 | | | | | | |
| | 36 | | | | | | |
| 4 | 39 | | | | | | |
| | 42 | | | | | | |
| | 45 | | | | | | |
| | 48 | | | | | | |
| 5 | 51 | | | | | | |
| | 54 | | | | | | |
| | 57 | | | | | | |
| | 60 | | | | | | |
| 6 | 63 | | | | | | |
| | 66 | | | | | | |
| | 69 | | | | | | |
| | 72 | | | | | | |
| 7 | 75 | | | | | | |
| | 78 | | | | | | |
| | 81 | | | | | | |
| | 84 | | | | | | |
| PERC. RATE | | | | | | | |
| DEPTH TO G. W. | | | | | | | |

Notes:

Sparaco Engineering and Land Surveying PC
26 Fireman Memorial Drive - Suite 210
Pomona, NY 10970

Phone: (845) 362-1966
Fax: (845) 362-1987
Email: info@selsny.com

# Test Hole Log

Site: OAK TREE
Job #: SY-1385
Date: 10/31/18
Name: W.M.J.

Weather Cond.: CLEAR 50°

Sheet No: 2 | 2

#21

| DEPTH FEET | DEPTH INCHES | TEST HOLE | TEST HOLE | TEST HOLE | TEST HOLE | TEST HOLE | TEST HOLE |
|---|---|---|---|---|---|---|---|
| 8 | 87 | PERC | | | | | |
| | 90 | | | | | | |
| | 93 | | | | | | |
| | 96 | | | | | | |
| 9 | 99 | | | | | | |
| | 102 | | | | | | |
| | 105 | | | | | | |
| | 108 | | | | | | |
| 10 | 111 | SOME SAND STONE SOFT | | | | | |
| | 114 | | | | | | |
| | 117 | | | | | | |
| | 120 | | | | | | |
| 11 | 123 | | | | | | |
| | 126 | | | | | | |
| | 129 | | | | | | |
| | 132 | | | | | | |
| 12 | 135 | | | | | | |
| | 138 | | | | | | |
| | 141 | | | | | | |
| | 144 | | | | | | |
| 13 | 147 | | | | | | |
| | 150 | | | | | | |
| | 153 | | | | | | |
| | 156 | | | | | | |
| 14 | 159 | | | | | | |
| | 162 | | | | | | |
| | 165 | | | | | | |
| | 168 | | | | | | |
| PERC. RATE | | | | | | | |
| DEPTH TO G. W. | | | | | | | |

Notes:

NEW YORK STATE DEPARTMENT OF HEALTH

Bureau of Community Sanitation and Food Protection

# Percolation Test Data

See instructions on reverse side

Development/Site: Oak Tree (T/V/C) County: Rockland

Date: 10/31/18 Test Conducted By: Sean Kinsley

| Test Hole No. | Test Hole Depth (Inches) | Lot No. | Soil Profile | Presoaking Date & Time | Time | Percolation Test Runs 1 | 2 | 3 | 4 | 5 | 6 |
|---|---|---|---|---|---|---|---|---|---|---|---|
| #21 | | | See Soil Log stopwatch | 2" Above 13:29 | END | | | | | | |
| | | | | | BEGIN | | | | | | |
| | | | | | RESULT | N. G. | | | | | |
| | | | | | END | | | | | | |
| | | | | | BEGIN | | | | | | |
| | | | | | RESULT | | | | | | |
| | | | | | END | | | | | | |
| | | | | | BEGIN | | | | | | |
| | | | | | RESULT | | | | | | |
| | | | | | END | | | | | | |
| | | | | | BEGIN | | | | | | |
| | | | | | RESULT | | | | | | |
| | | | | | END | | | | | | |
| | | | | | BEGIN | | | | | | |
| | | | | | RESULT | | | | | | |
| | | | | | END | | | | | | |
| | | | | | BEGIN | | | | | | |
| | | | | | RESULT | | | | | | |

1. Begin time, end time and result in mintes for a water elevation change from 6" to 5" above the bottom of the test hole.

United States Department of Agriculture

Soil Conservation Service

In cooperation with Cornell University Agricultural Experiment Station

# Soil Survey of Rockland County, New York

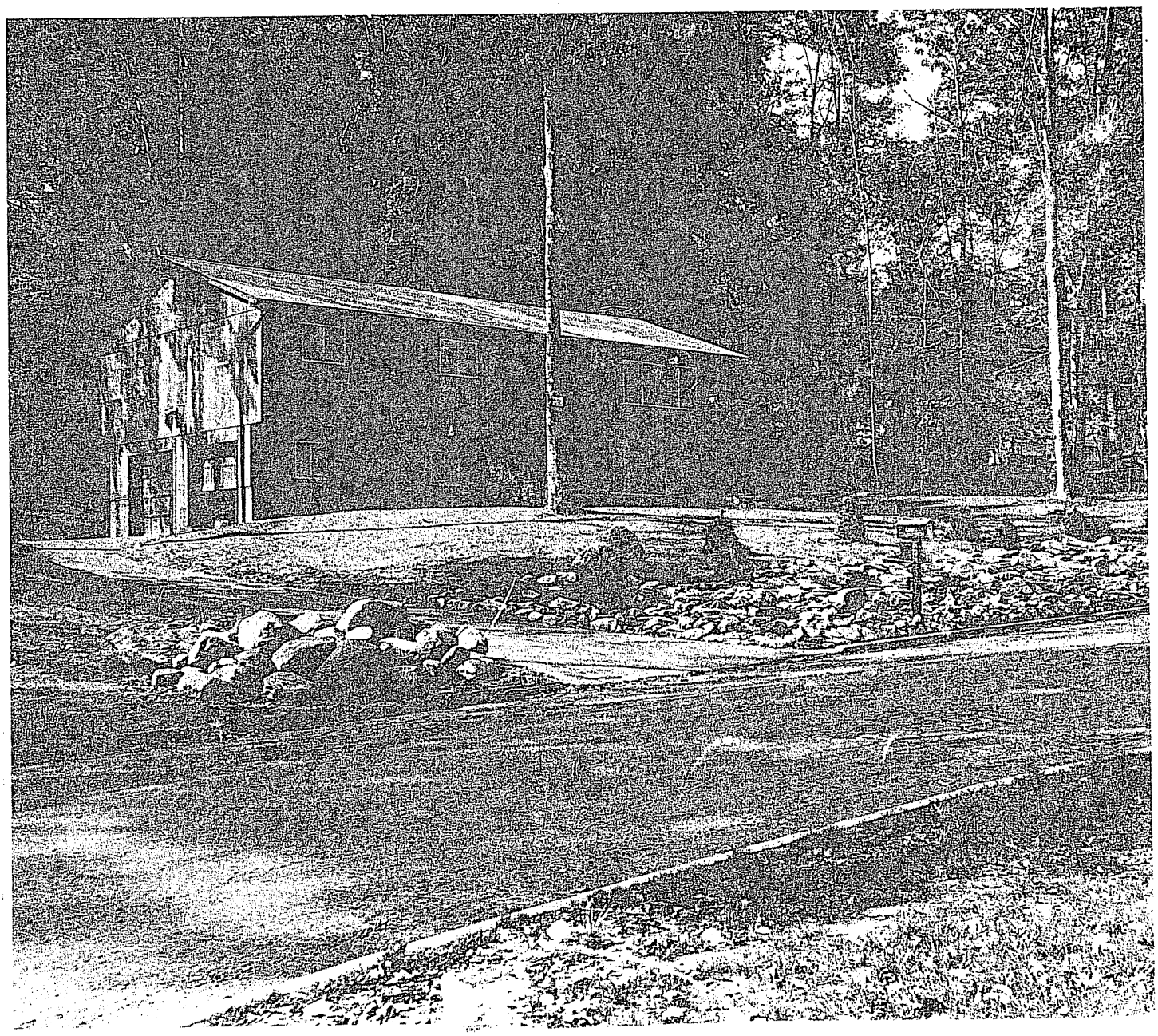

# ArcGIS Web Map

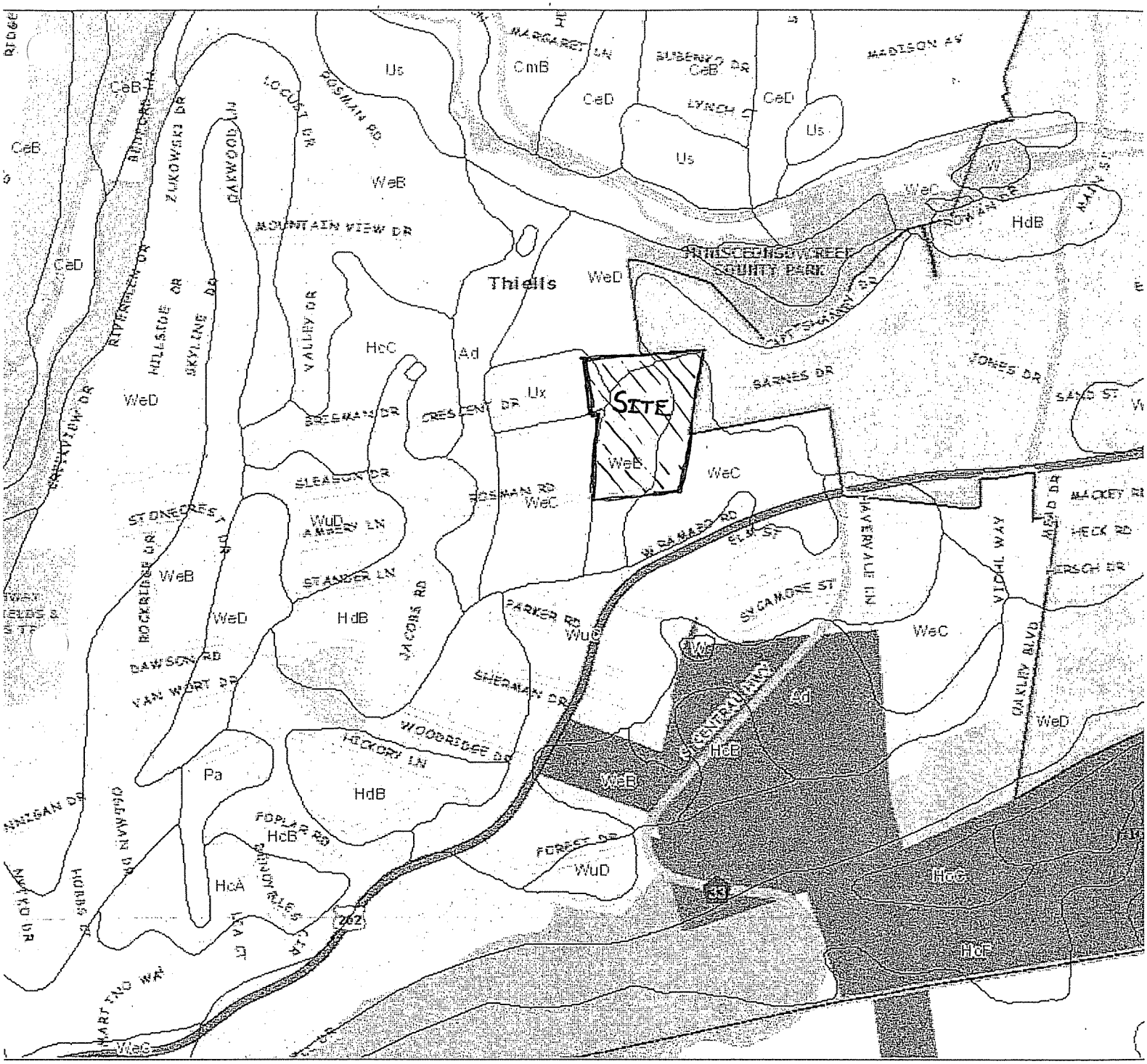

| Soil name and map symbol | Hydrologic group | Flooding | | | High water table | | | Bedrock | | Potential frost action | Risk of corrosion | |
|---|---|---|---|---|---|---|---|---|---|---|---|---|
| | | Frequency | Duration | Months | Depth | Kind | Months | Depth | Hardness | | Uncoated steel | Concrete |
| | | | | | Ft | | | In | | | | |
| Pt*, Pv*. Pits | | | | | | | | | | | | |
| Ra----------<br>Rippowam | C | Frequent---- | Brief----- | Oct-May | 0-1.5 | Apparent | Sep-Jun | >60 | --- | High----- | High----- | High. |
| ReA, ReB, ReC, ReD----------<br>Riverhead | B | None-------- | --- | --- | >6.0 | --- | --- | >60 | --- | Moderate | Low------ | High. |
| RuB*, RuC*, RuD*:<br>Riverhead--------<br>Urban land. | B | None-------- | --- | --- | >6.0 | --- | --- | >60 | --- | Moderate | Low------ | High. |
| Sa----------<br>Sloan | B/D B | Occasional | Brief----- | Nov-Jun | 0-1.0 | Apparent | Nov-Jun | >60 | --- | High----- | High----- | Low. |
| Ur*, Us, Uw. Udorthents | | | | | | | | | | | | |
| * Ux*. Urban land | | | | | | | | | | | | |
| Wa----------<br>Wallington | C | None-------- | --- | --- | 0.5-1.5 | Perched | Jan-Apr | >60 | --- | High----- | High----- | Moderate. |
| Wc----------<br>Watchaug | B | None-------- | --- | --- | 1.5-2.5 | Apparent | Nov-Apr | >60 | --- | High----- | Low------ | High. |
| * WeA, WeB, WeC, WeD----------<br>Wethersfield | C | None-------- | --- | --- | 1.5-2.5 | Perched | Feb-Apr | >60 | --- | Moderate | Low------ | Moderate. |
| WuB*, WuC*, WuD*:<br>Wethersfield-----<br>Urban land. | C | None-------- | --- | --- | 1.5-2.5 | Perched | Feb-Apr | >60 | --- | Moderate | Low------ | Moderate. |
| YaB, YaC, YaD-----<br>Yalesville | C | None-------- | --- | --- | >6.0 | --- | --- | 20-40 | Hard | Low------ | Low------ | Moderate. |
| YuB*, YuC*, YuD*:<br>Yalesville-------<br>Urban land. | C | None-------- | --- | --- | >6.0 | --- | --- | 20-40 | Hard | Low------ | Low------ | Moderate. |

* See description of the map unit for composition and behavior characteristics of the map unit.

**SPARACO & YOUNGBLOOD, PLLC**
18 NORTH MAIN STREET
HARRIMAN, NY 10926
845-782-8543

# Worksheet 2: Runoff Curve Number and Runoff

Project: **Oak Tree SY-1385** By: SMS Date: **3-Feb-20**

Location: **Town of Haverstraw, NY** Checked: Date:

**Shade one:** Existing Developed CN for Sub-basin: *Site-1*

## 1. Runoff Curve Number (CN)

| Soil name and hydrologic group (appendix A) | Cover Description (cover type, treatment, and hydrologic condition; percent impervious; unconnected / connected impervious area ratio) | CN Table 2-2 | CN Figure 2.3 | CN Figure 2.4 | Area ☒ acres ☐ mi² ☐ % | Product of CN X AREA |
|---|---|---|---|---|---|---|
| B | Woods - Good Condition | 55 | | | 0 | 0 |
| B | Lawn / Open Space - Good Condition | 61 | | | 0 | 0 |
| C | Woods - Good Condition | 70 | | | 1 | 70 |
| C | Lawn / Open Space - Good Condition | 74 | | | 2.2 | 162.8 |
| D | Woods - Good Condition | 77 | | | 0 | 0 |
| D | Lawn / Open Space - Good Condition | 80 | | | 0 | 0 |
| | Impervious Surfaces | 98 | | | 0.94 | 92.12 |
| | | | | Totals = | 4.14 | 324.92 |

CN (weighted) = total product / total area = 324.92 / 4.14 = 78.48309179

**Use CN =** 78

## 2. Runoff

| | Storm #1 | Storm #2 | Storm #3 |
|---|---|---|---|
| Frequency. . . . . yr. | | | |
| Rainfall, P (24 - hour) . . . . . in. | | | |
| Runoff, Q . . . . . in. | | | |

*(Use P and CN with table 2-1, fig. 2-1, or eqs. 2-3 and 2-4.)*

**SPARACO & YOUNGBLOOD, PLLC**
18 NORTH MAIN STREET
HARRIMAN, NY 10926
845-782-8543

# Worksheet 2: Runoff Curve Number and Runoff

Project: **Oak Tree SY-1385** By: SMS Date: **3-Feb-20**

Location: **Town of Haverstraw, NY** Checked: Date:

**Shade one:** Existing **Developed** CN for Sub-basin: *Site-1*

## 1. Runoff Curve Number (CN)

| Soil name and hydrologic group (appendix A) | Cover Description (cover type, treatment, and hydrologic condition; percent impervious; unconnected / connected impervious area ratio) | CN Table 2-2 | CN Figure 2.3 | CN Figure 2.4 | Area ☒ acres ☐ mi² ☐ % | Product of CN X AREA |
|---|---|---|---|---|---|---|
| B | Woods - Good Condition | 55 | | | 0 | 0 |
| B | Lawn / Open Space - Good Condition | 61 | | | 0 | 0 |
| C | Woods - Good Condition | 70 | | | 0.1 | 7 |
| C | Lawn / Open Space - Good Condition | 74 | | | 1.01 | 74.74 |
| D | Woods - Good Condition | 77 | | | 0 | 0 |
| D | Lawn / Open Space - Good Condition | 80 | | | 0 | 0 |
| | Impervious Surfaces | 98 | | | 0.35 | 34.3 |
| | | | | Totals = | 1.46 | 116.04 |

CN (weighted) = total product / total area = 116.04 / 1.46 = 79.47945205

**Use CN =** 79

## 2. Runoff

| | Storm #1 | Storm #2 | Storm #3 |
|---|---|---|---|
| Frequency..... yr. | | | |
| Rainfall, P (24 - hour) ..... in. | | | |
| Runoff, Q ..... in. | | | |

*(Use P and CN with table 2-1, fig. 2-1, or eqs. 2-3 and 2-4.)*

**SPARACO & YOUNGBLOOD, PLLC**
18 NORTH MAIN STREET
HARRIMAN, NY 10926
845-782-8543

# Worksheet 2: Runoff Curve Number and Runoff

Project: **Oak Tree SY-1385** By: SMS Date: **3-Feb-20**

Location: **Town of Haverstraw, NY** Checked: Date:

**Shade one:** Existing [Developed] CN for Sub-basin: *Site-1A*

## 1. Runoff Curve Number (CN)

| Soil name and hydrologic group (appendix A) | Cover Description (cover type, treatment, and hydrologic condition; percent impervious; unconnected / connected impervious area ratio) | CN Table 2-2 | CN Figure 2.3 | CN Figure 2.4 | Area ☒ acres ☐ mi² ☐ % | Product of CN X AREA |
|---|---|---|---|---|---|---|
| B | Woods - Good Condition | 55 | | | 0 | 0 |
| B | Lawn / Open Space - Good Condition | 61 | | | 0 | 0 |
| C | Woods - Good Condition | 70 | | | 0 | 0 |
| C | Lawn / Open Space - Good Condition | 74 | | | 0.06 | 4.44 |
| D | Woods - Good Condition | 77 | | | 0 | 0 |
| D | Lawn / Open Space - Good Condition | 80 | | | 0 | 0 |
| | Impervious Surfaces | 98 | | | 0.37 | 36.26 |
| | | | | Totals = | 0.43 | 40.7 |

CN (weighted) = total product / total area = 40.7 / 0.43 = 94.65116279

**Use CN =** **95**

## 2. Runoff

| Storm #1 | Storm #2 | Storm #3 |
|---|---|---|
| | | |

Frequency. . . . . yr.
Rainfall, P (24 - hour) . . . . . in.
Runoff, Q . . . . . in.

*(Use P and CN with table 2-1, fig. 2-1, or eqs. 2-3 and 2-4.)*

**SPARACO & YOUNGBLOOD, PLLC**
18 NORTH MAIN STREET
HARRIMAN, NY 10926
845-782-8543

# Worksheet 2: Runoff Curve Number and Runoff

Project: **Oak Tree SY-1385** By: SMS Date: **3-Feb-20**

Location: **Town of Haverstraw, NY** Checked: Date:

**Shade one:** Existing Developed CN for Sub-basin: *Site-2*

## 1. Runoff Curve Number (CN)

| Soil name and hydrologic group (appendix A) | Cover Description (cover type, treatment, and hydrologic condition; percent impervious; unconnected / connected impervious area ratio) | CN Table 2-2 | CN Figure 2.3 | CN Figure 2.4 | Area ☒ acres ☐ mi² ☐ % | Product of CN X AREA |
|---|---|---|---|---|---|---|
| B | Woods - Good Condition | 55 | | | 0 | 0 |
| B | Lawn / Open Space - Good Condition | 61 | | | 0 | 0 |
| C | Woods - Good Condition | 70 | | | 0 | 0 |
| C | Lawn / Open Space - Good Condition | 74 | | | 0.18 | 13.32 |
| D | Woods - Good Condition | 77 | | | 0 | 0 |
| D | Lawn / Open Space - Good Condition | 80 | | | 0 | 0 |
| | Impervious Surfaces | 98 | | | 0.13 | 12.74 |
| | | | | Totals = | 0.31 | 26.06 |

CN (weighted) = total product / total area = 26.06 / 0.31 = 84.06451613

**Use CN =** **84**

## 2. Runoff

| | Storm #1 | Storm # 2 | Storm #3 |
|---|---|---|---|
| Frequency | yr. | | |
| Rainfall, P (24 - hour) | in. | | |
| Runoff, Q | in. | | |

*(Use P and CN with table 2-1, fig. 2-1, or eqs. 2-3 and 2-4.)*

**SPARACO & YOUNGBLOOD, PLLC**
18 NORTH MAIN STREET
HARRIMAN, NY 10926
845-782-8543

# Worksheet 2: Runoff Curve Number and Runoff

Project: **Oak Tree SY-1385** By: SMS Date: **3-Feb-20**

Location: **Town of Haverstraw, NY** Checked: Date:

**Shade one:** Existing [Developed] CN for Sub-basin: *Site-2*

## 1. Runoff Curve Number (CN)

| Soil name and hydrologic group (appendix A) | Cover Description (cover type, treatment, and hydrologic condition; percent impervious; unconnected / connected impervious area ratio) | CN Table 2-2 | CN Figure 2.3 | CN Figure 2.4 | Area ☒ acres ☐ mi² ☐ % | Product of CN X AREA |
|---|---|---|---|---|---|---|
| B | Woods - Good Condition | 55 | | | 0 | 0 |
| B | Lawn / Open Space - Good Condition | 61 | | | 0 | 0 |
| C | Woods - Good Condition | 70 | | | 0 | 0 |
| C | Lawn / Open Space - Good Condition | 74 | | | 0.07 | 5.18 |
| D | Woods - Good Condition | 77 | | | 0 | 0 |
| D | Lawn / Open Space - Good Condition | 80 | | | 0 | 0 |
| | Impervious Surfaces | 98 | | | 0.15 | 14.7 |
| | | | | Totals = | 0.22 | 19.88 |

CN (weighted) = total product / total area = 19.88 / 0.22 = 90.36363636

**Use CN =** **90**

## 2. Runoff

| | Storm #1 | Storm #2 | Storm #3 |
|---|---|---|---|
| Frequency | yr. | | |
| Rainfall, P (24 - hour) | in. | | |
| Runoff, Q | in. | | |

*(Use P and CN with table 2-1, fig. 2-1, or eqs. 2-3 and 2-4.)*

**SPARACO & YOUNGBLOOD, PLLC**
18 NORTH MAIN STREET
HARRIMAN, NY 10926
845-782-8543

# Worksheet 2: Runoff Curve Number and Runoff

Project: **Oak Tree SY-1385** By: SMS Date: **3-Feb-20**

Location: **Town of Haverstraw, NY** Checked: Date:

**Shade one:** Existing Developed CN for Sub-basin: *Site-3*

## 1. Runoff Curve Number (CN)

| Soil name and hydrologic group (appendix A) | Cover Description (cover type, treatment, and hydrologic condition; percent impervious; unconnected / connected impervious area ratio) | CN Table 2-2 | CN Figure 2.3 | CN Figure 2.4 | Area ■ acres ☐ mi² ☐ % | Product of CN X AREA |
|---|---|---|---|---|---|---|
| B | Woods - Good Condition | 55 | | | 0 | 0 |
| B | Lawn / Open Space - Good Condition | 61 | | | 0 | 0 |
| C | Woods - Good Condition | 70 | | | 0.7 | 49 |
| C | Lawn / Open Space - Good Condition | 74 | | | 2.13 | 157.62 |
| D | Woods - Good Condition | 77 | | | 0 | 0 |
| D | Lawn / Open Space - Good Condition | 80 | | | 0 | 0 |
| | Impervious Surfaces | 98 | | | 0.73 | 71.54 |
| | | | | Totals = | 3.56 | 278.16 |

CN (weighted) = total product / total area = 278.16 / 3.56 = 78.13483146

**Use CN =** **78**

## 2. Runoff

| | |
|---|---|
| Frequency | yr. |
| Rainfall, P (24 - hour) | in. |
| Runoff, Q | in. |

*(Use P and CN with table 2-1, fig. 2-1, or eqs. 2-3 and 2-4.)*

| Storm #1 | Storm #2 | Storm #3 |
|---|---|---|
| | | |

**SPARACO & YOUNGBLOOD, PLLC**
18 NORTH MAIN STREET
HARRIMAN, NY 10926
845-782-8543

# Worksheet 2: Runoff Curve Number and Runoff

Project: **Oak Tree SY-1385** By: SMS Date: **3-Feb-20**

Location: **Town of Haverstraw, NY** Checked: Date:

**Shade one:** Existing [Developed] CN for Sub-basin: *Site-3*

## 1. Runoff Curve Number (CN)

| Soil name and hydrologic group (appendix A) | Cover Description (cover type, treatment, and hydrologic condition; percent impervious; unconnected / connected impervious area ratio) | CN Table 2-2 | CN Figure 2.3 | CN Figure 2.4 | Area ☒ acres ☐ mi² ☐ % | Product of CN X AREA |
|---|---|---|---|---|---|---|
| B | Woods - Good Condition | 55 | | | 0 | 0 |
| B | Lawn / Open Space - Good Condition | 61 | | | 0 | 0 |
| C | Woods - Good Condition | 70 | | | 0.16 | 11.2 |
| C | Lawn / Open Space - Good Condition | 74 | | | 0 | 0 |
| D | Woods - Good Condition | 77 | | | 0 | 0 |
| D | Lawn / Open Space - Good Condition | 80 | | | 0 | 0 |
| | Impervious Surfaces | 98 | | | 0.00 | 0 |
| | | | | Totals = | 0.16 | 11.2 |

CN (weighted) = total product / total area = 11.2 / 0.16 = 70

**Use CN =** **70**

## 2. Runoff

| Storm #1 | Storm #2 | Storm #3 |
|---|---|---|
| | | |

Frequency. . . . . yr.
Rainfall, P (24 - hour) . . . . . in.
Runoff, Q . . . . . in.

*(Use P and CN with table 2-1, fig. 2-1, or eqs. 2-3 and 2-4.)*

**SPARACO & YOUNGBLOOD, PLLC**
18 NORTH MAIN STREET
HARRIMAN, NY 10926
845-782-8543

# Worksheet 2: Runoff Curve Number and Runoff

Project: **Oak Tree SY-1385** By: SMS Date: **3-Feb-20**

Location: **Town of Haverstraw, NY** Checked: Date:

**Shade one:** Existing [Developed] CN for Sub-basin: *Site-3A*

## 1. Runoff Curve Number (CN)

| Soil name and hydrologic group (appendix A) | Cover Description (cover type, treatment, and hydrologic condition; percent impervious; unconnected / connected impervious area ratio) | CN Table 2-2 | CN Figure 2.3 | CN Figure 2.4 | Area ☒ acres ☐ mi² ☐ % | Product of CN X AREA |
|---|---|---|---|---|---|---|
| B | Woods - Good Condition | 55 | | | 0 | 0 |
| B | Lawn / Open Space - Good Condition | 61 | | | 0 | 0 |
| C | Woods - Good Condition | 70 | | | 0 | 0 |
| C | Lawn / Open Space - Good Condition | 74 | | | 0.46 | 34.04 |
| D | Woods - Good Condition | 77 | | | 0 | 0 |
| D | Lawn / Open Space - Good Condition | 80 | | | 0 | 0 |
| | Impervious Surfaces | 98 | | | 1.82 | 178.36 |
| | | | | Totals = | 2.28 | 212.4 |

CN (weighted) = total product / total area = 212.4 / 2.28 = 93.15789474

**Use CN =** **93**

## 2. Runoff

| | Storm # 1 | Storm # 2 | Storm # 3 |
|---|---|---|---|
| Frequency | | | |
| Rainfall, P (24 - hour) | | | |
| Runoff, Q | | | |

*(Use P and CN with table 2-1, fig. 2-1, or eqs. 2-3 and 2-4.)*

**SPARACO & YOUNGBLOOD, PLLC**
18 NORTH MAIN STREET
HARRIMAN, NY 10926
845-782-8543

# Worksheet 2: Runoff Curve Number and Runoff

Project: **Oak Tree SY-1385** By: SMS Date: **3-Feb-20**

Location: **Town of Haverstraw, NY** Checked: Date:

**Shade one:** Existing Developed CN for Sub-basin: *Site-4*

## 1. Runoff Curve Number (CN)

| Soil name and hydrologic group (appendix A) | Cover Description (cover type, treatment, and hydrologic condition; percent impervious; unconnected / connected impervious area ratio) | CN Table 2-2 | CN Figure 2.3 | CN Figure 2.4 | Area ☒ acres ☐ mi² ☐ % | Product of CN X AREA |
|---|---|---|---|---|---|---|
| B | Woods - Good Condition | 55 | | | 0 | 0 |
| B | Lawn / Open Space - Good Condition | 61 | | | 0 | 0 |
| C | Woods - Good Condition | 70 | | | 0.61 | 42.7 |
| C | Lawn / Open Space - Good Condition | 74 | | | 0.3 | 22.2 |
| D | Woods - Good Condition | 77 | | | 0 | 0 |
| D | Lawn / Open Space - Good Condition | 80 | | | 0 | 0 |
| | Impervious Surfaces | 98 | | | 0.00 | 0 |
| | | | | Totals = | 0.91 | 64.9 |

CN (weighted) = total product / total area = 64.9 / 0.91 = 71.31868132

**Use CN =** 71

## 2. Runoff

| | Storm #1 | Storm #2 | Storm #3 |
|---|---|---|---|
| Frequency..... yr. | | | |
| Rainfall, P (24 - hour) ..... in. | | | |
| Runoff, Q ..... in. | | | |

*(Use P and CN with table 2-1, fig. 2-1, or eqs. 2-3 and 2-4.)*

**SPARACO & YOUNGBLOOD, PLLC**
18 NORTH MAIN STREET
HARRIMAN, NY 10926
845-782-8543

# Worksheet 2: Runoff Curve Number and Runoff

Project: **Oak Tree SY-1385** By: SMS Date: **3-Feb-20**

Location: **Town of Haverstraw, NY** Checked: Date:

**Shade one:** Existing [Developed] CN for Sub-basin: *Site-4*

## 1. Runoff Curve Number (CN)

| Soil name and hydrologic group (appendix A) | Cover Description (cover type, treatment, and hydrologic condition; percent impervious; unconnected / connected impervious area ratio) | CN Table 2-2 | CN Figure 2.3 | CN Figure 2.4 | Area ☒ acres ☐ mi² ☐ % | Product of CN X AREA |
|---|---|---|---|---|---|---|
| B | Woods - Good Condition | 55 | | | 0 | 0 |
| B | Lawn / Open Space - Good Condition | 61 | | | 0 | 0 |
| C | Woods - Good Condition | 70 | | | 0.4 | 28 |
| C | Lawn / Open Space - Good Condition | 74 | | | 1.37 | 101.38 |
| D | Woods - Good Condition | 77 | | | 0 | 0 |
| D | Lawn / Open Space - Good Condition | 80 | | | 0 | 0 |
| | Impervious Surfaces | 98 | | | 0.13 | 12.74 |
| | | | | Totals = | 1.9 | 142.12 |

CN (weighted) = total product / total area = 142.12 / 1.9 = 74.8

**Use CN =** 75

## 2. Runoff

| Storm #1 | Storm #2 | Storm #3 |
|---|---|---|
| | | |

Frequency. . . . . yr.
Rainfall, P (24 - hour) . . . . . in.
Runoff, Q . . . . . in.

*(Use P and CN with table 2-1, fig. 2-1, or eqs. 2-3 and 2-4.)*

**SPARACO & YOUNGBLOOD, PLLC**
18 NORTH MAIN STREET
HARRIMAN, NY 10926
845-782-8543

# Worksheet 2: Runoff Curve Number and Runoff

Project: **Oak Tree SY-1385** By: SMS Date: **3-Feb-20**

Location: **Town of Haverstraw, NY** Checked: Date:

**Shade one:** Existing Developed CN for Sub-basin: *Site-5*

## 1. Runoff Curve Number (CN)

| Soil name and hydrologic group (appendix A) | Cover Description (cover type, treatment, and hydrologic condition; percent impervious; unconnected / connected impervious area ratio) | CN Table 2-2 | CN Figure 2.3 | CN Figure 2.4 | Area ☒ acres ☐ mi² ☐ % | Product of CN X AREA |
|---|---|---|---|---|---|---|
| B | Woods - Good Condition | 55 | | | 0 | 0 |
| B | Lawn / Open Space - Good Condition | 61 | | | 0 | 0 |
| C | Woods - Good Condition | 70 | | | 2.5 | 175 |
| C | Lawn / Open Space - Good Condition | 74 | | | 2.18 | 161.32 |
| D | Woods - Good Condition | 77 | | | 0 | 0 |
| D | Lawn / Open Space - Good Condition | 80 | | | 0 | 0 |
| | Impervious Surfaces | 98 | | | 0.88 | 86.24 |
| | | | | Totals = | 5.56 | 422.56 |

CN (weighted) = total product / total area = 422.56 / 5.56 = 76

**Use CN =** 76

## 2. Runoff

| Storm #1 | Storm #2 | Storm #3 |
|---|---|---|
| | | |

Frequency. . . . . yr.
Rainfall, P (24 - hour) . . . . . in.
Runoff, Q . . . . . in.

*(Use P and CN with table 2-1, fig. 2-1, or eqs. 2-3 and 2-4.)*

**SPARACO & YOUNGBLOOD, PLLC**
18 NORTH MAIN STREET
HARRIMAN, NY 10926
845-782-8543

# Worksheet 2: Runoff Curve Number and Runoff

Project: **Oak Tree SY-1385** By: SMS Date: **3-Feb-20**

Location: **Town of Haverstraw, NY** Checked: Date:

**Shade one:** Existing [Developed] CN for Sub-basin: *Site-5*

## 1. Runoff Curve Number (CN)

| Soil name and hydrologic group (appendix A) | Cover Description (cover type, treatment, and hydrologic condition; percent impervious; unconnected / connected impervious area ratio) | CN Table 2-2 | CN Figure 2.3 | CN Figure 2.4 | Area ☒ acres ☐ mi² ☐ % | Product of CN X AREA |
|---|---|---|---|---|---|---|
| B | Woods - Good Condition | 55 | | | 0 | 0 |
| B | Lawn / Open Space - Good Condition | 61 | | | 0 | 0 |
| C | Woods - Good Condition | 70 | | | 1.8 | 126 |
| C | Lawn / Open Space - Good Condition | 74 | | | 1.84 | 136.16 |
| D | Woods - Good Condition | 77 | | | 0 | 0 |
| D | Lawn / Open Space - Good Condition | 80 | | | 0 | 0 |
| | Impervious Surfaces | 98 | | | 0.14 | 13.72 |
| | | | | Totals = | 3.78 | 275.88 |

CN (weighted) = total product / total area = 275.88 / 3.78 = 72.98412698

**Use CN =** 73

## 2. Runoff

| | | Storm #1 | Storm #2 | Storm #3 |
|---|---|---|---|---|
| Frequency | yr. | | | |
| Rainfall, P (24 - hour) | in. | | | |
| Runoff, Q | in. | | | |

*(Use P and CN with table 2-1, fig. 2-1, or eqs. 2-3 and 2-4.)*

**SPARACO & YOUNGBLOOD, PLLC**
18 NORTH MAIN STREET
HARRIMAN, NY 10926
845-782-8543

# Worksheet 2: Runoff Curve Number and Runoff

Project: **Oak Tree SY-1385** By: SMS Date: **3-Feb-20**

Location: **Town of Haverstraw, NY** Checked: Date:

**Shade one:** Existing [Developed] CN for Sub-basin: *Site-5A*

## 1. Runoff Curve Number (CN)

| Soil name and hydrologic group (appendix A) | Cover Description (cover type, treatment, and hydrologic condition; percent impervious; unconnected / connected impervious area ratio) | CN Table 2-2 | CN Figure 2.3 | CN Figure 2.4 | Area ■ acres ☐ mi² ☐ % | Product of CN X AREA |
|---|---|---|---|---|---|---|
| B | Woods - Good Condition | 55 | | | 0 | 0 |
| B | Lawn / Open Space - Good Condition | 61 | | | 0 | 0 |
| C | Woods - Good Condition | 70 | | | 0 | 0 |
| C | Lawn / Open Space - Good Condition | 74 | | | 0.83 | 61.42 |
| D | Woods - Good Condition | 77 | | | 0 | 0 |
| D | Lawn / Open Space - Good Condition | 80 | | | 0 | 0 |
| | Impervious Surfaces | 98 | | | 3.43 | 336.14 |
| | | | | Totals = | 4.26 | 397.56 |

CN (weighted) = total product / total area = 397.56 / 4.26 = 93.32394366

**Use CN =** 93

## 2. Runoff

| | Storm # 1 | Storm # 2 | Storm # 3 |
|---|---|---|---|
| Frequency | | | |
| Rainfall, P (24 - hour) | | | |
| Runoff, Q | | | |

*(Use P and CN with table 2-1, fig. 2-1, or eqs. 2-3 and 2-4.)*

**SPARACO & YOUNGBLOOD, PLLC**
18 NORTH MAIN STREET
HARRIMAN, NY 10926
845-782-8543

# Worksheet 2: Runoff Curve Number and Runoff

Project: **Oak Tree SY-1385** By: SMS Date: **17-Sep-19**

Location: **Town of Haverstraw, NY** Checked: Date:

**Shade one:** Existing | Developed CN for Sub-basin: *Off-1*

## 1. Runoff Curve Number (CN)

| Soil name and hydrologic group (appendix A) | Cover Description (cover type, treatment, and hydrologic condition; percent impervious; unconnected / connected impervious area ratio) | CN Table 2-2 | CN Figure 2.3 | CN Figure 2.4 | Area ■ acres ☐ mi² ☐ % | Product of CN X AREA |
|---|---|---|---|---|---|---|
| B | Woods - Good Condition | 55 | | | 0 | 0 |
| B | Lawn / Open Space - Good Condition | 61 | | | 0 | 0 |
| C | Woods - Good Condition | 70 | | | 0.5 | 35 |
| C | Lawn / Open Space - Good Condition | 74 | | | 0.93 | 68.82 |
| D | Woods - Good Condition | 77 | | | 0 | 0 |
| D | Lawn / Open Space - Good Condition | 80 | | | 0 | 0 |
| | Impervious Surfaces | 98 | | | 6.42 | 629.16 |
| | | | | Totals = | 7.85 | 732.98 |

CN (weighted) = total product / total area = 732.98 / 7.85 = 93.37324841

**Use CN =** **93**

## 2. Runoff

| | Storm #1 | Storm #2 | Storm #3 |
|---|---|---|---|
| Frequency | yr. | | |
| Rainfall, P (24 - hour) | in. | | |
| Runoff, Q | in. | | |

*(Use P and CN with table 2-1, fig. 2-1, or eqs. 2-3 and 2-4.)*

**SPARACO & YOUNGBLOOD, PLLC**
18 NORTH MAIN STREET
HARRIMAN, NY 10926
845-782-8543

# Worksheet 2: Runoff Curve Number and Runoff

Project: **Oak Tree SY-1385** By: SMS Date: **17-Sep-19**

Location: **Town of Haverstraw, NY** Checked: Date:

**Shade one:** Existing | Developed CN for Sub-basin: *Off-2*

## 1. Runoff Curve Number (CN)

| Soil name and hydrologic group (appendix A) | Cover Description (cover type, treatment, and hydrologic condition; percent impervious; unconnected / connected impervious area ratio) | CN Table 2-2 | CN Figure 2.3 | CN Figure 2.4 | Area ☒ acres ☐ mi² ☐ % | Product of CN X AREA |
|---|---|---|---|---|---|---|
| B | Woods - Good Condition | 55 | | | 0 | 0 |
| B | Lawn / Open Space - Good Condition | 61 | | | 0 | 0 |
| C | Woods - Good Condition | 70 | | | 1 | 70 |
| C | Lawn / Open Space - Good Condition | 74 | | | 1.62 | 119.88 |
| D | Woods - Good Condition | 77 | | | 0 | 0 |
| D | Lawn / Open Space - Good Condition | 80 | | | 0 | 0 |
| | Impervious Surfaces | 98 | | | 0.70 | 68.6 |
| | | | | Totals = | 3.32 | 258.48 |

CN (weighted) = total product / total area = 258.48 / 3.32 = 77.85542169

**Use CN =** **78**

## 2. Runoff

| Storm #1 | Storm #2 | Storm #3 |
|---|---|---|
| | | |

Frequency. . . . . yr.
Rainfall, P (24 - hour) . . . . . in.
Runoff, Q . . . . . in.

*(Use P and CN with table 2-1, fig. 2-1, or eqs. 2-3 and 2-4.)*

## ***Water Quality and Routing Analysis Backup Calculations:***

- *Reference: Exhibit 4-III: Unit Peak Discharge (qu) for SCS type III rainfall distribution (from TR-55 manual)*
- *Reference: Figure 8.5 Detention Time vs. Discharge Ratios (from NYSDEC Water Quality Manual)*

*(The following Data provided for Subareas "Site-1A"," Site-5A" & "Site-3A"):*

1.) *Title Sheet*
2.) *Plan Views and Details for each Detention System*
3.) *Peak Discharge Calculations*
4.) *Volume Calculations*
5.) *Summary Table WQ-1: Water Quality Calculations*
6.) *Summary Table WQ-2: Runoff Reduction Volume Calculations*
7.) *Channel Protection Calculations*
8.) *Elevation vs. Discharge Summary Chart*

Exhibit 4-III: Unit peak discharge ($q_u$) for SCS type III rainfall distribution

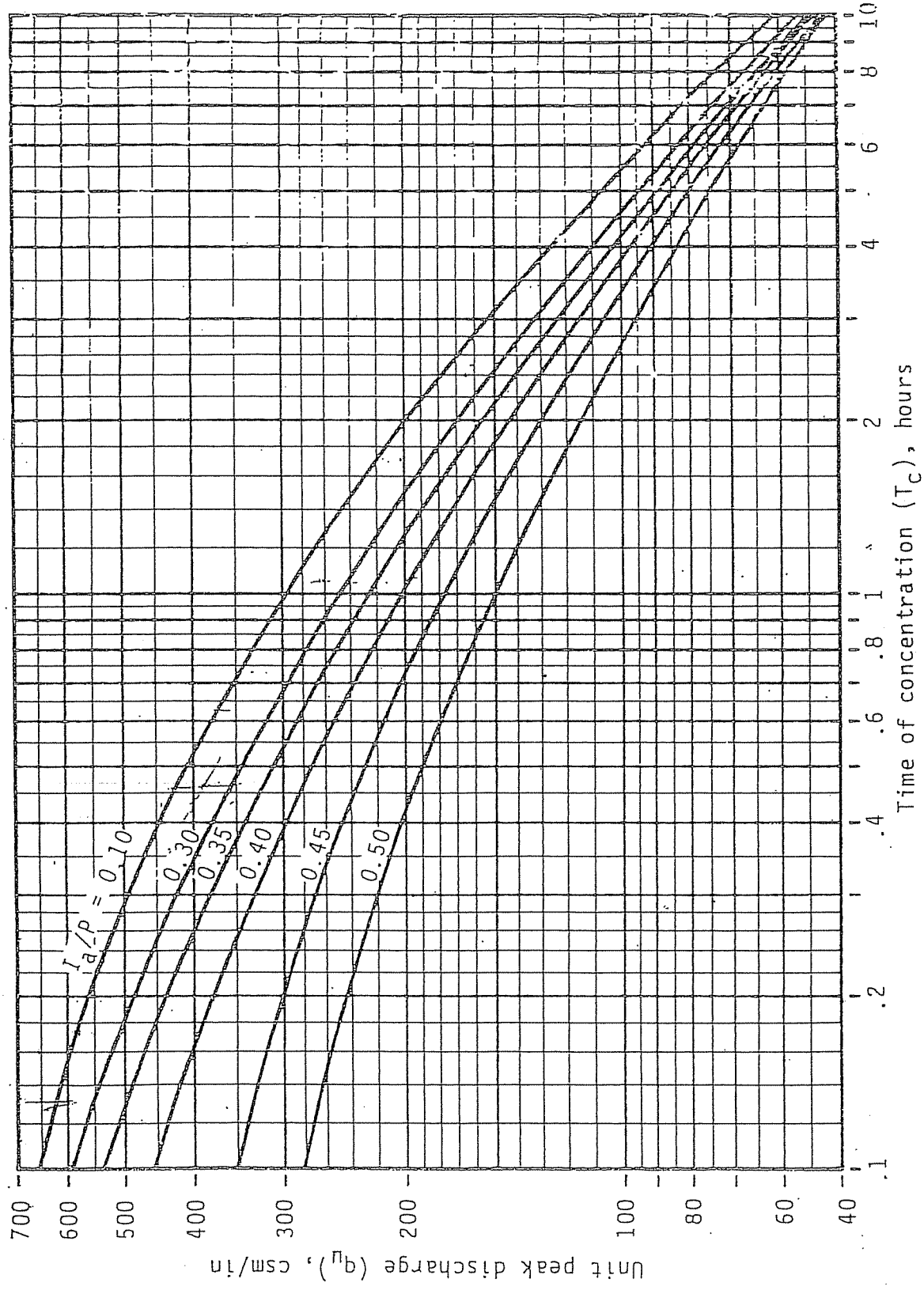

## Compute Stream Channel Protection Volume, ($Cp_v$) (see Section 4.3 and Appendix B)

For stream channel protection, provide 24 hours of extended detention (T) for the one-year event.

Compute Channel Protection Storage Volume

First, determine the value of the unit peak discharge ($q_u$) using TR-55 and Type II Rainfall Distribution

- Initial abstraction (Ia) for CN of 78 is 0.564: [Ia = (200/CN - 2)]
- Ia/P = (0.564)/ 2.3 inches = 0.245
- $T_c$ = 0.35 hours
- Using the above data, $q_u$ = 570 csm/in (cubic feet per second per square mile per year)

Figure 8.5 Detention Time vs. Discharge Ratios (Source: MDE, 2000)

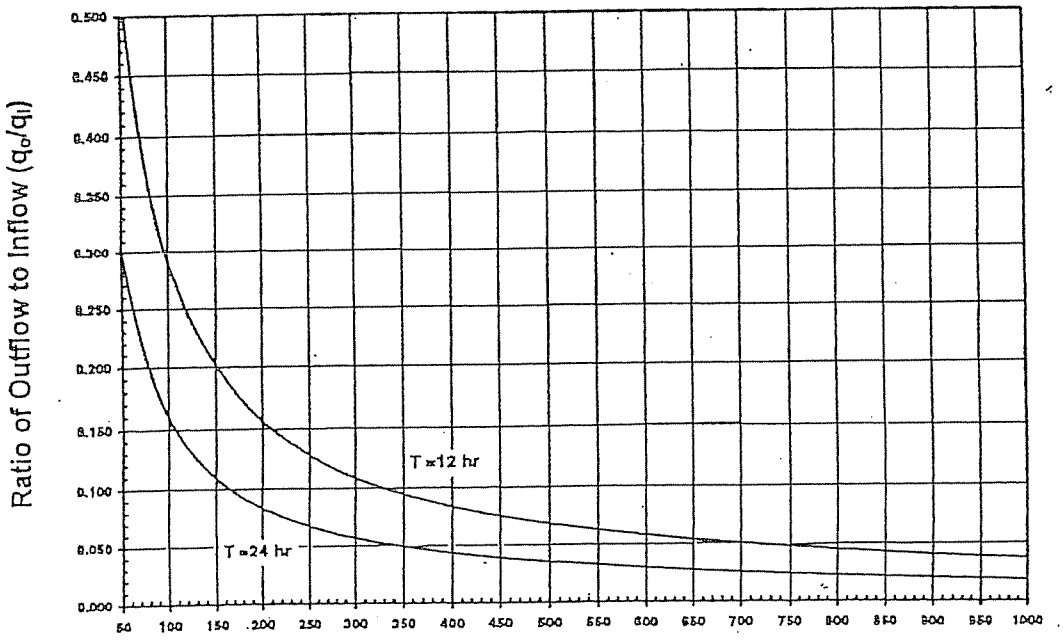

***SPARACO AND YOUNGBLOOD, PLLC***
P.O. Box #818, 18 North Main Street
Harriman, NY 10926
845-782-8543

# *WATER QUALITY CALCULATIONS*

| | |
|---|---|
| Project: | **Oak Tree (SY-1385)** |
| Location: | **Haverstraw, NY** |
| Drainage Sub-area: | **SITE-1A** |
| Date: | **6-Feb-20** |
| By: | **SMS** |

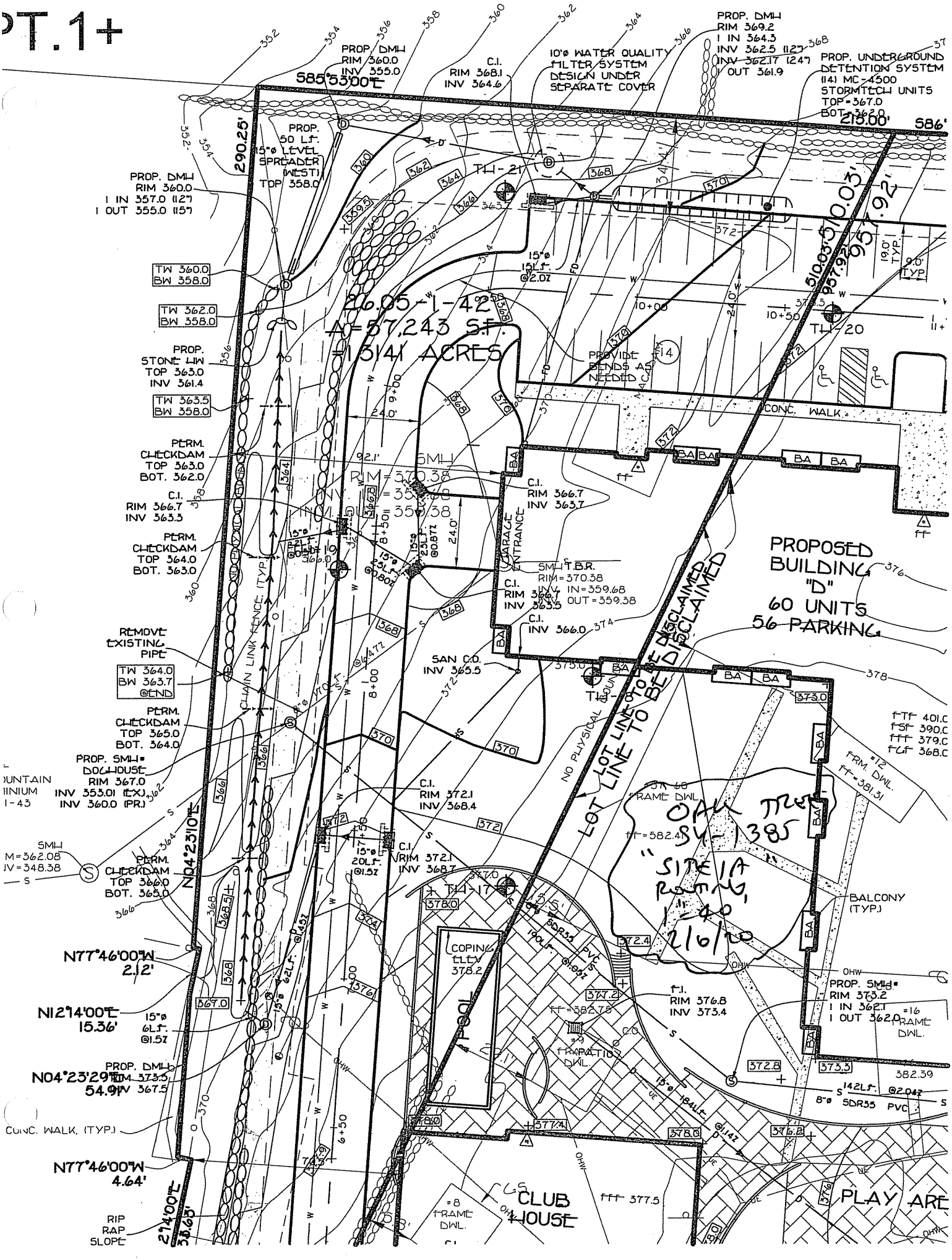

PT.1+
PROP. DMH RIM 360.0 INV 355.0
S85°53'00"E
C.I. RIM 368.1 INV 364.6
10'ø WATER QUALITY FILTER SYSTEM DESIGN UNDER SEPARATE COVER
PROP. DMH RIM 369.2 1 IN 364.3 INV 362.5 (12") INV 362.17 (24") 1 OUT 361.9
PROP. UNDERGROUND DETENTION SYSTEM (14) MC-4500 STORMTECH UNITS TOP=367.0 BOT=362.0
215.00'
S86°
290.25'
PROP. 50 L.F. 15"ø LEVEL SPREADER (WEST) TOP 358.0
PROP. DMH RIM 360.0 1 IN 357.0 (12") 1 OUT 355.0 (15")
TH-21
TW 360.0 BW 358.0
TW 362.0 BW 358.0
26.05-1-42
A=57,243 S.F.
=1.3141 ACRES
PROP. STONE HW TOP 363.0 INV 361.4
TW 363.5 BW 358.0
PERM. CHECKDAM TOP 363.0 BOT. 362.0
C.I. RIM 366.7 INV 363.3
PERM. CHECKDAM TOP 364.0 BOT. 363.0
15"ø 15L.F. @2.0%
PROVIDE BENDS AS NEEDED
510.03'
957.92'
TH-20
CONC. WALK
SMH RIM=370.38 INV=359.68 INV OUT=359.38
C.I. RIM 366.7 INV 363.7
GARAGE ENTRANCE
SMH T.B.R. RIM=370.38 INV IN=359.68 OUT=359.38
C.I. RIM 366.7 INV 363.5
C.I. INV 366.0
PROPOSED BUILDING "D" 60 UNITS 56 PARKING
REMOVE EXISTING PIPE
TW 364.0 BW 363.7 @END
CHAIN LINK FENCE (TYP.)
SAN C.O. INV 365.5
TH-8
NO PHYSICAL BOUNDARY
LOT LINE TO BE DISCLAIMED
PERM. CHECKDAM TOP 365.0 BOT. 364.0
PROP. SMH DOGHOUSE RIM 367.0 INV 353.01 (EX.) INV 360.0 (PR.)
C.I. RIM 372.1 INV 368.4
C.I. RIM 372.1 INV 368.7
FTF 401.0 FSF 390.0 FFF 379.0 FGF 368.0
FRM. DWL. FF=381.31
OAK TREE SY-1385 "SITE 1A" ROUTING 1"=40 2/6/20
FRAME DWL.
FF=582.4
BALCONY (TYP.)
SMH M=362.08 IV=348.38
PERM. CHECKDAM TOP 366.0 BOT. 365.0
N04°23'10"E
TH-17
COPING ELEV 378.2
POOL
N77°46'00"W 2.12'
N12°14'00"E 15.36'
15"ø 6L.F. @1.5%
PROP. DMH RIM 373.5 INV 367.5
N04°23'29"E 54.91'
F.I. RIM 376.8 INV 373.4
FF=582.75
FRAME DWL.
PROP. SMH RIM 373.2 1 IN 362.1 1 OUT 362.0
FRAME DWL.
382.39
8"ø SDR35 PVC
CONC. WALK (TYP.)
N77°46'00"W 4.64'
RIP RAP SLOPE
CLUB HOUSE
FRAME DWL.
FFF 377.5
PLAY ARE

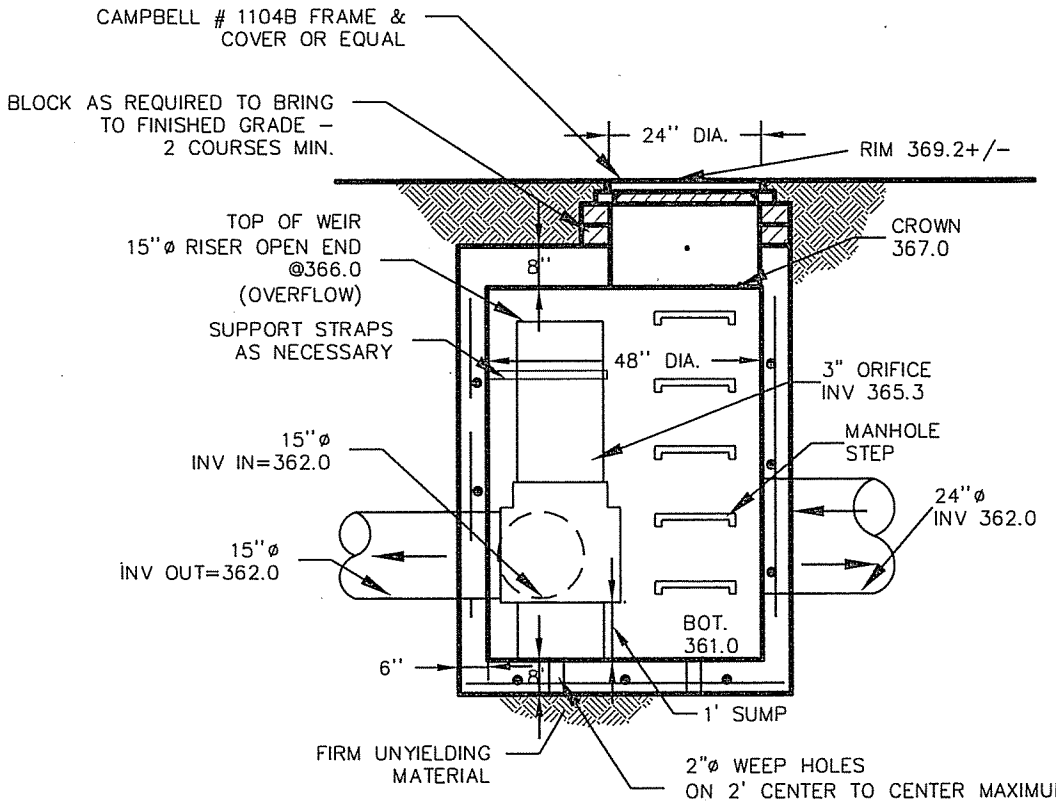


PROFILE VIEW

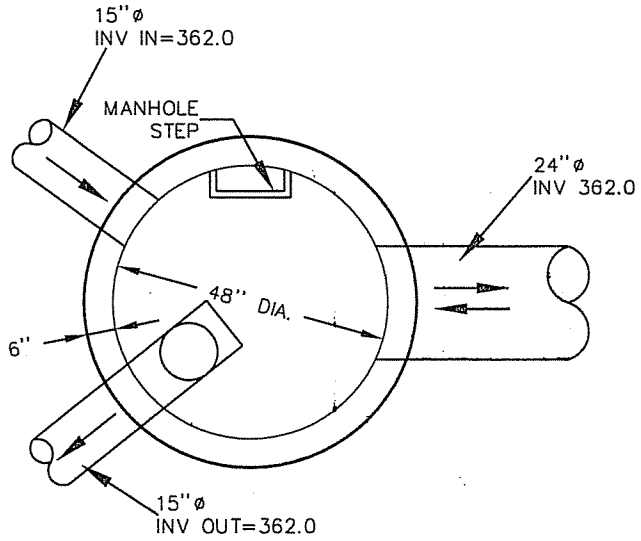


PLAN VIEW

NOTES:

1. MANHOLE TO CONFORM TO A.S.T.M. C478 (LATEST REVISION).
2. PRECAST CONCRETE MANHOLES WITH RESILENT SEALS AT JOINTS.
3. MANUFACTURER SHALL CERTIFY ALL COMPONENTS MANHOLE FOR HS20 LOADING
4. RISER SECTION JOINTS SHALL BE FIELD-MORTARED

## OUTLET STRUCTURE (WEST)–MC4500

N.T.S.

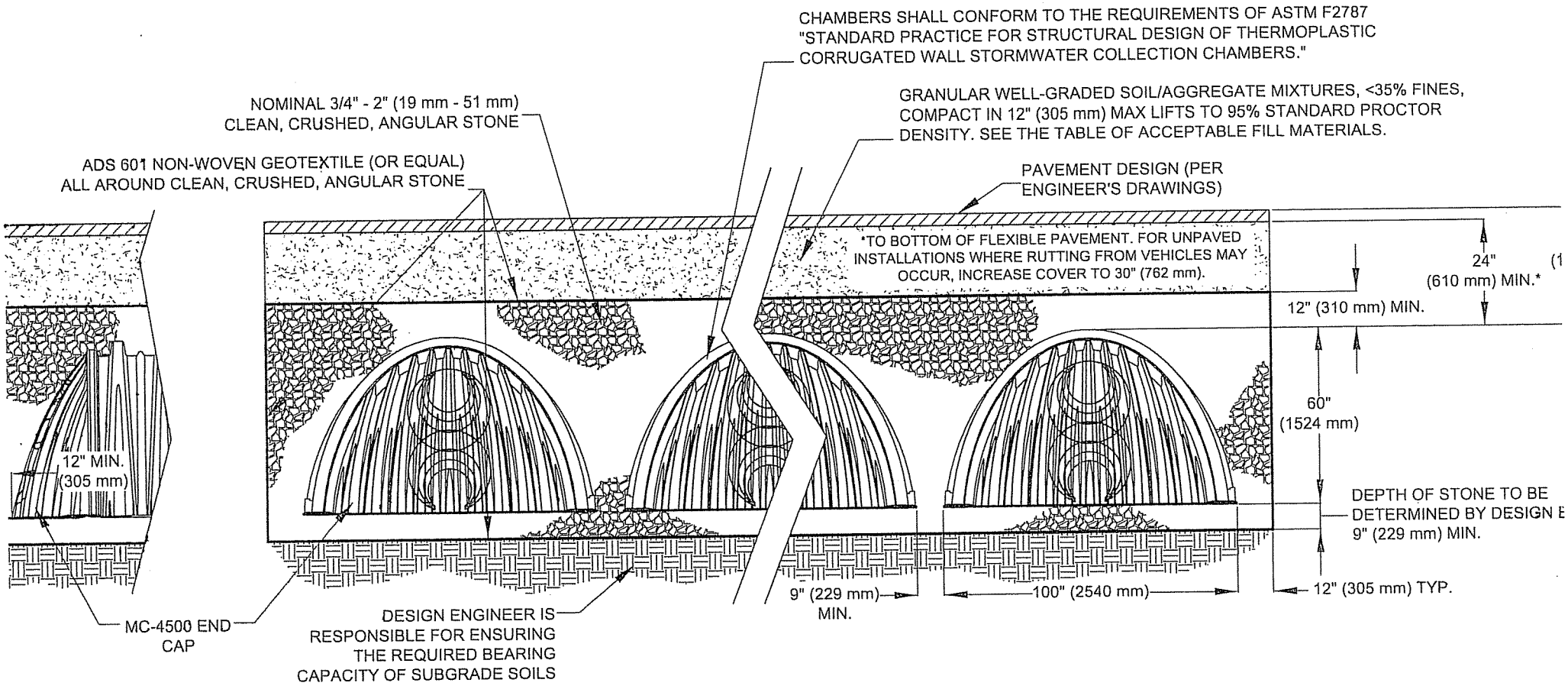


THE INSTALLED CHAMBER SYSTEM SHALL PROVIDE THE LOAD FACTORS SPECIFIED IN THE AASHTO LRFD BRIDGE DESIGN SPECIFICATIONS SECTION 12.12 FOR EARTH AND LIVE LOADS, WITH CONSIDERATION FOR IMPACT AND MULTIPLE VEHICLE PRESENCES.

## STORMTECH MC-4500 CROSS-SECTION

N.T.S.

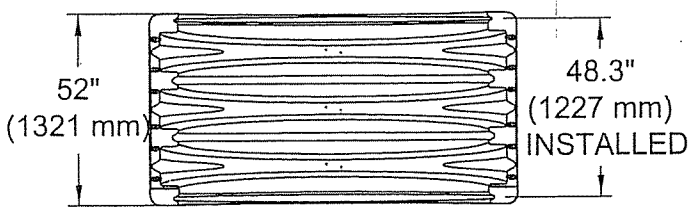


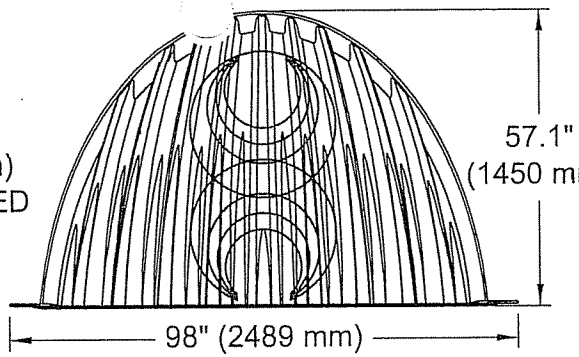


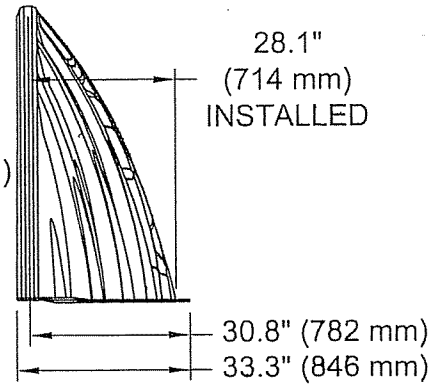


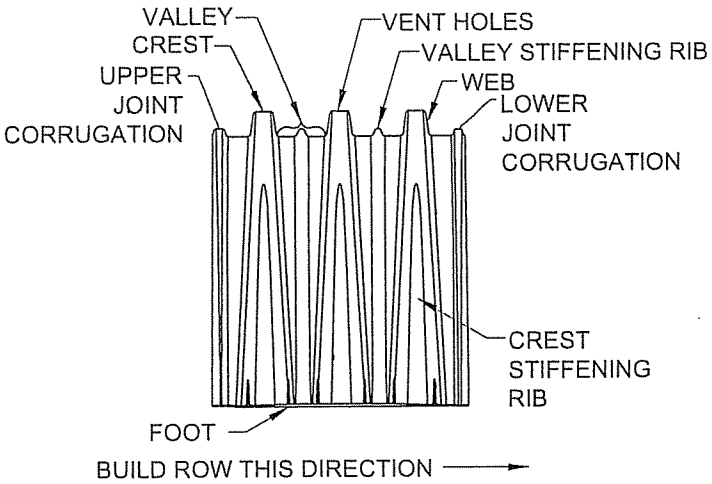


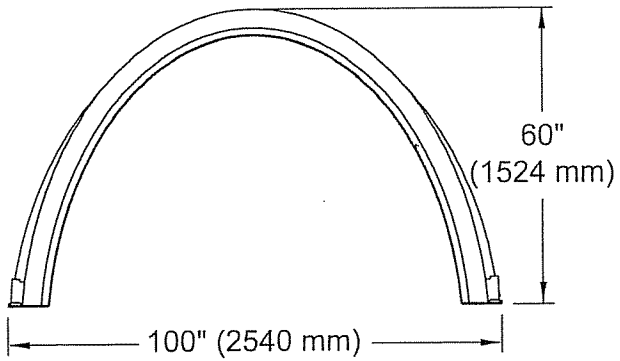


**NOMINAL CHAMBER SPECIFICATIONS**

| | |
|---|---|
| SIZE (W x H x INSTALLED LENGTH) | 100.0" x 60.0" x 48.3" [2540 mm x 1524 mm x 1227 mm] |
| CHAMBER STORAGE | 106.5 ft³ [3.01 m³] |
| MINIMUM INSTALLED STORAGE* | 162.6 ft³ [4.60 m³] |
| NOMINAL WEIGHT | 128 lbs [58 kg] |

**NOMINAL END CAP SPECIFICATIONS**

| | |
|---|---|
| SIZE (W x H x INSTALLED LENGTH) | 98.0" x 57.1" x 28.1" [2489 mm x 1450 mm x 714 mm] |
| END CAP STORAGE | 26.8 ft³ [0.76 m³] |
| MINIMUM INSTALLED STORAGE* | 98.0 ft³ [2.78 m³] |
| NOMINAL WEIGHT | 80 lbs [36 kg] |

# STORMTECH MC-4500 CHAMBER

N.T.S.

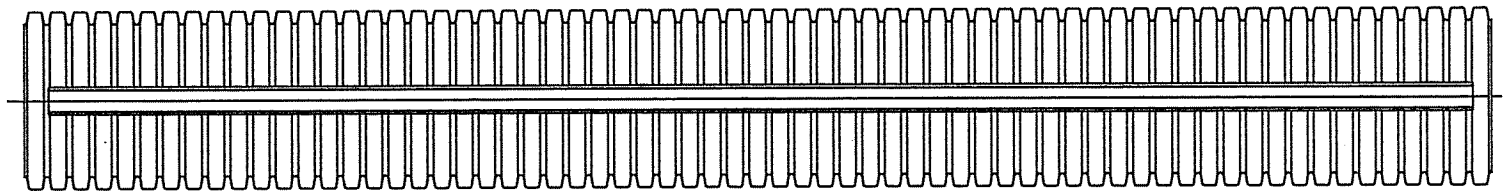

PLAN VIEW

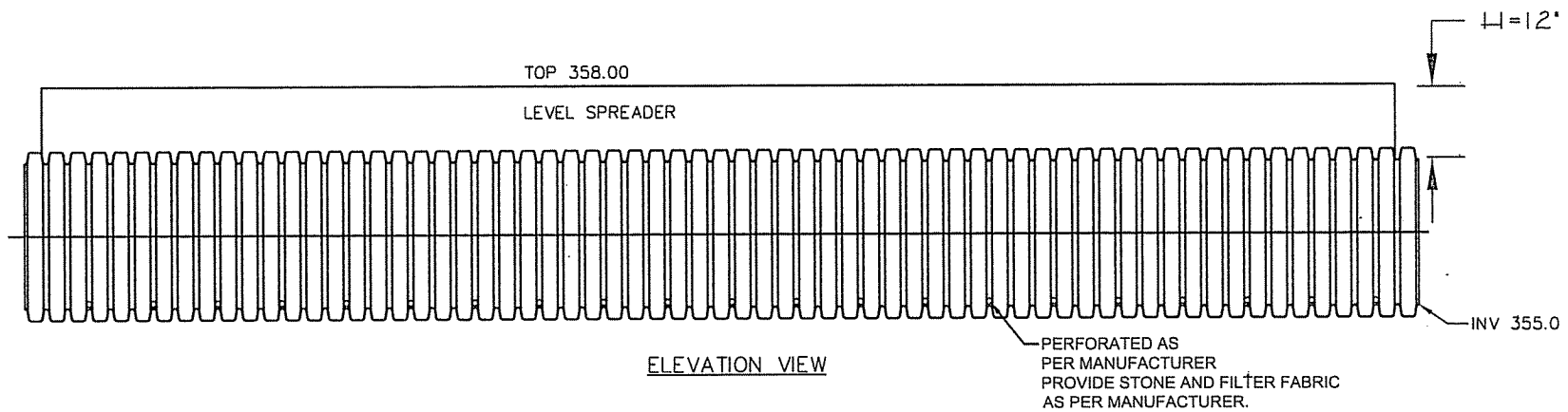


ELEVATION VIEW

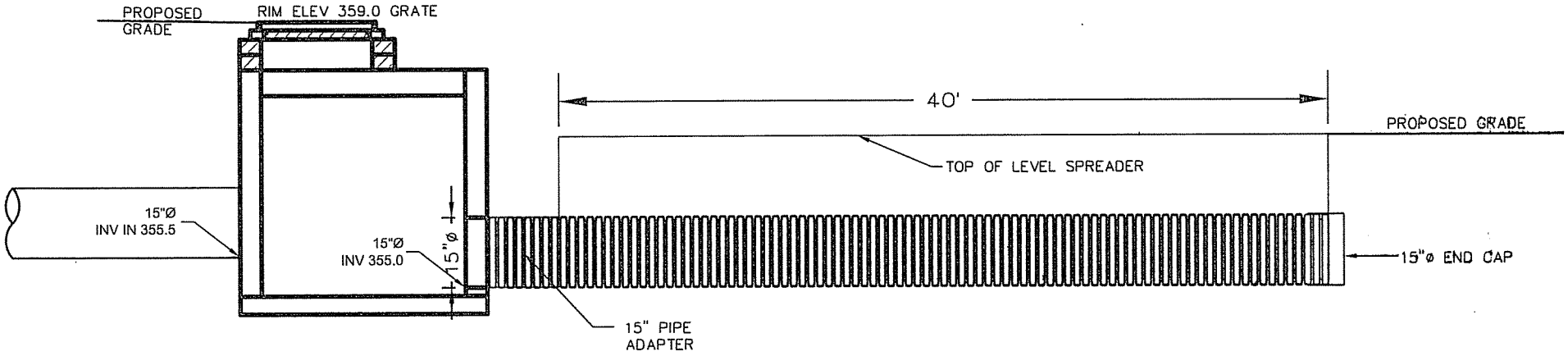


## LEVEL SPREADER (WEST)

N.T.S.

***SPARACO AND YOUNGBLOOD, PLLC***
P.O. Box #818, 18 North Main Street
Harriman, NY 10926
845-782-8543

## Worksheet 4: Graphical Peak Discharge Method

Project: **Oak Tree (SY-1385)** By: SMS
Location: **Haverstraw, NY** Date: 6-Feb-20

**Shade one:** Existing **Developed** $q_p$ req'd for Sub-basin: *SITE-1A*

1. Data:

Drainage Area.....Am = 0.0007 $mi^2$ (acres/640)
Runoff Curve Number.....CN = 95 From Worksheet #2 (or calibrated Hec-1 Curve Number)
Time of Concentration.....$T_c$ = 0.083 hr (From Worksheet #3)
Runoff Distribution Type..... = III (I, IA, II, III)
Pond and Swamp areas spread throughout watershed.....= 0 percent of $A_m$ (% acres or mi2 covered)

| | | Storm # 1 | Storm # 2 | Storm # 3 |
|---|---|---|---|---|
| 2. | Frequency..... yr. | 1 | | |
| 3. | Rainfall, P (24 - hour)..... in. | 2.5 | | |
| 4. | Initial Abstraction, $I_a$ ..... in. [$I_a$ = 0.2*S] [S = 1000/CN -10]. . . . 0.53 | 0.105 | | |
| 5. | Compute $I_a$/P..... in. | 0.042 | | |
| 6. | Unit Peak Discharge, qu..... csm/in. (Use Tc and Ia/P with exhibit 4-III) | 650 | | |
| 7. | Runoff, Q ..... in. [$Q=(P-0.2S)^2/(P-0.8S]$ | 1.96 | | |
| 8. | Pond and Swamp Adjustment Factor, $F_p$. . . % (Use percent pond and swamp area with Table 4-2. Factor is 1.0 for zero percent pond and swamp area.) | 1 | | |
| 9. | Peak Discharge, $q_p$..... cfs (Where $q_p=q_u A_m Q F_p$) | 0.9 | | |

**Project:**

StormTech
Detention - Retention - Water Quality
A division of ADS

| | | |
|---|---|---|
| Chamber Model - | MC-4500 | |
| Units - | Imperial | Click Here for Metric |
| Number of Chambers - | 14 | |
| Number of End Caps - | 2 | |
| Voids in the stone (porosity) - | 40 | % |
| Base of Stone Elevation - | 361.25 | ft |
| Amount of Stone Above Chambers - | 12 | in |
| Amount of Stone Below Chambers - | 9 | in |

☐ Include Perimeter Stone in Calculations

| Height of System (inches) | Incremental Single Chamber (cubic feet) | Incremental Single End Cap (cubic feet) | Incremental Chambers (cubic feet) | Incremental End Cap (cubic feet) | Incremental Stone (cubic feet) | Incremental Ch+EC and Stone (cubic feet) | Cumulative System (cubic feet) | Elevation (feet) |
|---|---|---|---|---|---|---|---|---|
| 81 | 0.00 | 0.00 | 0.00 | 0.00 | 19.22 | 19.22 | 2493.96 | 368.00 |
| 80 | 0.00 | 0.00 | 0.00 | 0.00 | 19.22 | 19.22 | 2474.75 | 367.92 |
| 79 | 0.00 | 0.00 | 0.00 | 0.00 | 19.22 | 19.22 | 2455.53 | 367.83 |
| 78 | 0.00 | 0.00 | 0.00 | 0.00 | 19.22 | 19.22 | 2436.32 | 367.75 |
| 77 | 0.00 | 0.00 | 0.00 | 0.00 | 19.22 | 19.22 | 2417.10 | 367.67 |
| 76 | 0.00 | 0.00 | 0.00 | 0.00 | 19.22 | 19.22 | 2397.89 | 367.58 |
| 75 | 0.00 | 0.00 | 0.00 | 0.00 | 19.22 | 19.22 | 2378.67 | 367.50 |
| 74 | 0.00 | 0.00 | 0.00 | 0.00 | 19.22 | 19.22 | 2359.45 | 367.42 |
| 73 | 0.00 | 0.00 | 0.00 | 0.00 | 19.22 | 19.22 | 2340.24 | 367.33 |
| 72 | 0.00 | 0.00 | 0.00 | 0.00 | 19.22 | 19.22 | 2321.02 | 367.25 |
| 71 | 0.00 | 0.00 | 0.00 | 0.00 | 19.22 | 19.22 | 2301.81 | 367.17 |
| 70 | 0.00 | 0.00 | 0.00 | 0.00 | 19.22 | 19.22 | 2282.59 | 367.08 |
| 69 | 0.04 | 0.00 | 0.57 | 0.00 | 18.99 | 19.56 | 2263.38 | 367.00 |
| 68 | 0.12 | 0.01 | 1.63 | 0.02 | 18.56 | 20.20 | 2243.82 | 366.92 |
| 67 | 0.16 | 0.03 | 2.31 | 0.05 | 18.27 | 20.63 | 2223.61 | 366.83 |
| 66 | 0.21 | 0.05 | 2.92 | 0.10 | 18.01 | 21.03 | 2202.98 | 366.75 |
| 65 | 0.27 | 0.07 | 3.76 | 0.14 | 17.66 | 21.55 | 2181.96 | 366.67 |
| 64 | 0.45 | 0.09 | 6.34 | 0.18 | 16.61 | 23.12 | 2160.41 | 366.58 |
| 63 | 0.67 | 0.11 | 9.31 | 0.23 | 15.40 | 24.94 | 2137.28 | 366.50 |
| 62 | 0.80 | 0.14 | 11.19 | 0.28 | 14.63 | 26.10 | 2112.34 | 366.42 |
| 61 | 0.91 | 0.17 | 12.71 | 0.34 | 14.00 | 27.04 | 2086.25 | 366.33 |
| 60 | 1.00 | 0.19 | 14.04 | 0.38 | 13.45 | 27.87 | 2059.20 | 366.25 |
| 59 | 1.09 | 0.22 | 15.22 | 0.43 | 12.95 | 28.61 | 2031.33 | 366.17 |
| 58 | 1.16 | 0.24 | 16.29 | 0.48 | 12.51 | 29.28 | 2002.72 | 366.08 |
| 57 | 1.23 | 0.27 | 17.28 | 0.54 | 12.09 | 29.91 | 1973.45 | 366.00 |
| 56 | 1.30 | 0.30 | 18.20 | 0.60 | 11.70 | 30.49 | 1943.54 | 365.92 |
| 55 | 1.36 | 0.32 | 19.05 | 0.65 | 11.33 | 31.04 | 1913.05 | 365.83 |
| 54 | 1.42 | 0.35 | 19.86 | 0.70 | 10.99 | 31.55 | 1882.01 | 365.75 |
| 53 | 1.47 | 0.37 | 20.63 | 0.74 | 10.67 | 32.04 | 1850.46 | 365.67 |
| 52 | 1.53 | 0.39 | 21.35 | 0.79 | 10.36 | 32.50 | 1818.43 | 365.58 |
| 51 | 1.57 | 0.42 | 22.04 | 0.83 | 10.06 | 32.94 | 1785.93 | 365.50 |
| 50 | 1.62 | 0.44 | 22.70 | 0.88 | 9.78 | 33.36 | 1752.99 | 365.42 |
| 49 | 1.67 | 0.46 | 23.33 | 0.93 | 9.51 | 33.77 | 1719.62 | 365.33 |
| 48 | 1.71 | 0.48 | 23.93 | 0.97 | 9.26 | 34.15 | 1685.86 | 365.25 |
| 47 | 1.75 | 0.50 | 24.50 | 1.01 | 9.01 | 34.52 | 1651.70 | 365.17 |
| 46 | 1.79 | 0.53 | 25.05 | 1.05 | 8.78 | 34.88 | 1617.18 | 365.08 |
| 45 | 1.83 | 0.55 | 25.58 | 1.09 | 8.55 | 35.22 | 1582.30 | 365.00 |
| 44 | 1.86 | 0.56 | 26.09 | 1.13 | 8.33 | 35.55 | 1547.09 | 364.92 |
| 43 | 1.90 | 0.58 | 26.58 | 1.17 | 8.12 | 35.86 | 1511.54 | 364.83 |
| 42 | 1.93 | 0.60 | 27.05 | 1.20 | 7.92 | 36.17 | 1475.68 | 364.75 |
| 41 | 1.96 | 0.62 | 27.50 | 1.24 | 7.72 | 36.46 | 1439.51 | 364.67 |
| 40 | 2.00 | 0.64 | 27.93 | 1.28 | 7.53 | 36.74 | 1403.06 | 364.58 |
| 39 | 2.03 | 0.66 | 28.35 | 1.31 | 7.35 | 37.01 | 1366.32 | 364.50 |
| 38 | 2.05 | 0.67 | 28.75 | 1.35 | 7.18 | 37.28 | 1329.30 | 364.42 |
| 37 | 2.08 | 0.69 | 29.14 | 1.38 | 7.01 | 37.53 | 1292.03 | 364.33 |
| 36 | 2.11 | 0.71 | 29.51 | 1.41 | 6.84 | 37.77 | 1254.50 | 364.25 |
| 35 | 2.13 | 0.72 | 29.87 | 1.45 | 6.69 | 38.01 | 1216.73 | 364.17 |
| 34 | 2.16 | 0.74 | 30.22 | 1.48 | 6.53 | 38.24 | 1178.72 | 364.08 |
| 33 | 2.18 | 0.76 | 30.56 | 1.51 | 6.39 | 38.46 | 1140.48 | 364.00 |
| 32 | 2.21 | 0.77 | 30.88 | 1.54 | 6.25 | 38.67 | 1102.03 | 363.92 |
| 31 | 2.23 | 0.79 | 31.19 | 1.57 | 6.11 | 38.87 | 1063.36 | 363.83 |
| 30 | 2.25 | 0.80 | 31.48 | 1.60 | 5.98 | 39.07 | 1024.49 | 363.75 |
| 29 | 2.27 | 0.82 | 31.77 | 1.64 | 5.85 | 39.26 | 985.42 | 363.67 |
| 28 | 2.29 | 0.84 | 32.05 | 1.68 | 5.72 | 39.45 | 946.16 | 363.58 |
| 27 | 2.31 | 0.85 | 32.31 | 1.69 | 5.61 | 39.62 | 906.70 | 363.50 |
| 26 | 2.33 | 0.86 | 32.56 | 1.72 | 5.50 | 39.78 | 867.09 | 363.42 |
| 25 | 2.34 | 0.87 | 32.81 | 1.74 | 5.40 | 39.95 | 827.30 | 363.33 |
| 24 | 2.36 | 0.89 | 33.04 | 1.77 | 5.29 | 40.10 | 787.36 | 363.25 |
| 23 | 2.38 | 0.90 | 33.26 | 1.80 | 5.19 | 40.25 | 747.26 | 363.17 |
| 22 | 2.39 | 0.91 | 33.47 | 1.82 | 5.10 | 40.39 | 707.01 | 363.08 |
| 21 | 2.41 | 0.92 | 33.68 | 1.84 | 5.01 | 40.53 | 666.61 | 363.00 |
| 20 | 2.42 | 0.93 | 33.87 | 1.87 | 4.92 | 40.66 | 626.09 | 362.92 |
| 19 | 2.43 | 0.95 | 34.05 | 1.89 | 4.84 | 40.78 | 585.43 | 362.83 |
| 18 | 2.44 | 0.96 | 34.23 | 1.91 | 4.76 | 40.90 | 544.65 | 362.75 |
| 17 | 2.46 | 0.97 | 34.39 | 1.93 | 4.68 | 41.01 | 503.75 | 362.67 |
| 16 | 2.47 | 0.98 | 34.55 | 1.96 | 4.61 | 41.12 | 462.73 | 362.58 |

***VOLUME OF SC-3500 SYSTEM (ISOLATOR UNITS) FOR:*** ***SITE-1A***

| STAGE (elev. In ft.) | VOLUME PER UNIT (cubic feet) | VOLUME SYSTEM (ac-ft) |
|---|---|---|
| 361.25 | 0.00 | 0.0000 |
| 362.00 | 172.94 | 0.0040 |
| 363.00 | 666.61 | 0.0153 |
| 364.00 | 1140.48 | 0.0262 |
| 365.00 | 1582.30 | 0.0363 |
| 366.00 | 1973.45 | 0.0453 |
| 367.00 | 2263.38 | 0.0520 |
| 368.00 | 2493.96 | 0.0573 |

***VOLUME OF SC-3500 SYSTEM (DETENTION UNITS) FOR:*** ***SITE-1A***

| STAGE (elev. In ft.) | VOLUME PER UNIT (cubic feet) | VOLUME SYSTEM (ac-ft) |
|---|---|---|
| 361.25 | 0.00 | 0.0000 |
| 362.00 | 0.00 | 0.0000 |
| 363.00 | 0.00 | 0.0000 |
| 364.00 | 0.00 | 0.0000 |
| 365.00 | 0.00 | 0.0000 |
| 366.00 | 0.00 | 0.0000 |
| 367.00 | 0.00 | 0.0000 |
| 368.00 | 0.00 | 0.0000 |

***COMBINED VOLUME OF SC-3500 SYSTEM FOR:*** ***SITE-1A***

| STAGE (elev. In ft.) | VOLUME PER UNIT (cubic feet) | VOLUME SYSTEM (ac-ft) |
|---|---|---|
| 361.25 | 0.00 | 0.0000 |
| 362.00 | 172.94 | 0.0040 |
| 363.00 | 666.61 | 0.0153 |
| 364.00 | 1140.48 | 0.0262 |
| 365.00 | 1582.30 | 0.0363 |
| 366.00 | 1973.45 | 0.0453 |
| 367.00 | 2263.38 | 0.0520 |
| 368.00 | 2493.96 | 0.0573 |

## ***SEEPAGE BASIN DATA:***

**1) Chamber:** 4.03 Ft. Long
8.17 Ft. Wide
60 = required number of chambers

**Chamber End Cap base area:** 15.6 sf
8 = required number of end caps

Area chambers: 1975.506 sf

Area end caps: 124.8 sf

Total Area for Percolation: **2100.306** sf

**2) Storage:**

Inside Area of Basin = $\pi r^2$ = $\pi (D/2)^2$

= 12.76 $ft^2$

= 0.00029 ac

= 0.0176 ac (for 60 LB)

**3) Outflow:**

*Stage 0.1 Only*

Seepage Area (A) = Exterior Area of Base

Stages 1-8

Seepage Area (A) = Sum ( Previous Seepage Area)

Percolation Rate (V) = 1 inch per 60 Minutes (1 Min actual, rounded up for conservative result)

= 0.000023 ft/sec

Outflow Rate (Q) = Seepage Area (A) x Percolation Rate (V)

*Basin Outflow:*

**SEEPAGE BASIN STAGE VS. OUTFLOW**

| Stage | Elev | Seepage Area ($ft^2$) | Percolation Rate (feet/sec) | Outflow Rate (cfs) |
|---|---|---|---|---|
| 0.1 | 361.25 | 2,100.3 | 0.000023 | 0.04862 |
| 1 | 362.25 | 2,100.3 | 0.000023 | 0.04862 |
| 2 | 363.25 | 2,100.3 | 0.000023 | 0.04862 |
| 3 | 364.25 | 2,100.3 | 0.000023 | 0.04862 |
| 4 | 365.25 | 2,100.3 | 0.000023 | 0.04862 |
| 5 | 366.25 | 2,100.3 | 0.000023 | 0.04862 |

***SPARACO AND YOUNGBLOOD, PLLC***
P.O. Box #818, 18 North Main Street
Harriman, NY 10926
845-782-8543

# Summary Table #WQ-1:Water Quality Volume Calculations

Project: **Oak Tree (SY-1385)**
Location: **Haverstraw, NY**
JOB # SY-1385

By: SMS
Rev. Date: 6-Feb-20

## *Water Quality Calculations*

*NYSDEC Required Storage Volume:*

Sub-Area: *SITE-1A*

Data:

| | | |
|---|---|---|
| P: | 1.3 | = 90% Rainfall Event Number from Figure #1 |
| Rv: | 0.82445 | = 0.05 + 0.009(I) (Min. Rv =0.2) Use Rv = 0.82445 |
| I: | 86.05 | = Impervious coverage percentage |
| A: | 0.43 | = Site Area to Basin (in acres) |
| WQv: | **0.038** | = Req'd Water Quality Volume (in ac-ft) |

$$= \frac{(P)(Rv)(A)}{12}$$

Pre Treatment required (20% if percolation rate less than 2-inches per hour and 100% if less than 2-inches per hour):

| | | |
|---|---|---|
| Percolation Rate: | 60 | minutes for 1 inch drop. |
| Volume percentage required: | 100 | percent |
| Pre-treatment volume: | 0.038 | ac-ft |
| Pre-treatment vol. provided: | 0.057 | ac-ft ok |

## ***Set required WQv Elev:***

| | | Elev. (ft.) | Cumulative Volume |
|---|---|---|---|
| Infiltration System Invert Elevation ($I_{EL}$) = | | 361.25 | (ac-ft) |
| Water Quality Storage Elevation Range: | High: | 366.00 | 0.0453 |
| | Low: | 361.00 | 0.0000 |
| | | Diff. = | 0.0453 |

Minimum WQ Volume required above permanent pool = **0.0384** ac-ft

Interpolated Volume Change = ( Higher Cumulative Volume - Req'd WQ Volume over Perm. Pool)/Diff. In Volume in Range

Interpolated Volume Change = ( 0.0453 - 0.0384 )/ 0.0453

Interpolated Volume Ratio = 0.1523

Interpolated Elevation Change = 366.00 - ( 0.1523 x 5.00 )

Interpolated Elevation Change = 365.24 ft.

Minimum Water Quality Volume High Elevation = 365.24 ft.

Set Water Quality Volume Elevation = 365.30 ft.

**Note: Total Storage at elevation: 365.30 is 0.0390 ac-ft, which is greater than req. 0.0384 ac-ft.* ok

***SPARACO AND YOUNGBLOOD, PLLC***
P.O. Box #818, 18 North Main Street
Harriman, NY 10926
845-782-8543

## Summary Table #WQ-2:Runoff Reduction Volume Calculations

Project: **Oak Tree (SY-1385)**
Location: **Haverstraw, NY**
JOB # SY-1385

By: SMS
Rev. Date: 6-Feb-20

***Runoff Reduction Volume Calculations***

*NYSDEC Required Runoff Reduction Volume for :* Sub-Area: *SITE-1A*

Data: Entire Subarea

| | | |
|---|---|---|
| P: | 1.3 | = 90% Rainfall Event Number from Figure #1 |
| Rv: | 0.950 | = 0.05 + 0.009(I) (I=100 percent) |
| Aic: | 0.37 | = Impervious cover targeted for runoff reduction (in acres) |
| Ai: | 0.111 | = (S)(Aic) (in acres) |
| S: | 0.3 | = Hydrologic Soil Group (HSG) Specific Reduction Factor |

HSG Type "A" = 0.55
HSG Type "B" = 0.4
HSG Type "C" = 0.3
HSG Type "D" = 0.2

$RR_{V1}$: **0.011** = Req'd Runoff Reduction Volume (in ac-ft)
$= \frac{(P)(Rv)(Ai)}{12}$

Provided Volume in Stormceptor Chamber system: **0.039 ac-ft** *up to WQv Elevation.* **ok, greater than required $RR_{v1}$:**

***Note: Current NYSDEC regulations allow RRv for 100% of WQv when using infiltration practices.**

*Total Available Volume in Stormceptor system:* 0.057 *ac-ft*

***SPARACO AND YOUNGBLOOD, PLLC***
P.O. Box #818, 18 North Main Street
Harriman, NY 10926
845-782-8543

## Channel Protection Storage Volume ($Cp_V$): Calculation:

Project: **Oak Tree (SY-1385)** By: SMS
Location: **Haverstraw, NY** Date: 6-Feb-20

Data:

Water Quality Orifice Invert. . . . . = 361.25 ft.
Water Quality Storage Elevation. . . . . = 365.30 ft.

| | | | Sub-basin: | SITE-1A | |
|---|---|---|---|---|---|
| 1. | Unit Peak Discharge, $q_u$. . . . . = | (csm/in.) | | 650 | |
| | Duration Time, T.....T = | (hr .) | | 24 | |
| | Runoff, Q . . . . . = | (in.) | | 1.96 | |
| | Drainage Area.....Am = | ($mi^2$ ) | | 0.0007 | |
| | Drainage Area (in acres) = $A_m$ x 640 = A = | (acres) | | 0.43 | |
| 2. | Find ($q_o/q_i$) from Figure 8.5. . . . . | | | 0.03 | |
| | ($q_o/q_i$ = Peak outflow/Peak Inflow discharge) | | | | |
| 3. | Calculate $V_s/V_r$ | | | 0.642 | |
| | $[V_s/V_r = 0.683-1.43(q_o/q_i) + 1.64 (q_o/q_i)^2 -0.804 (q_o/q_i)^3]$ | | | | |
| | | | | Total $V_s$ | |
| 4. | Solve for $V_s$ | (ac-ft) | 0.0451 | **0.0451** | (ac-ft) |
| | $[V_s=Cp_v = (V_s/V_r) \times Q \times A/12]$ | (cubic ft.) | 1,966 | 1966 | (cubic ft.) |
| 5. | Compute Average Release Rate = $Q_{AVG}$ | | | 0.02 | (cfs) |
| | $[Q_{AVG} = V_s /T*3600$ sec/hr] | | | | |

## *Calculate Required Channel Protection Volume Elevation ($Cp_V E$):*

| | | Elev. (ft.) | Cumulative Volume (ac-ft) | Actual WQ ume Reser (ac-ft) | Net Volume (ac-ft) |
|---|---|---|---|---|---|
| Water Quality Volume Elevation ($WQ_{vE}$) = | | 365.30 | | | |
| Channel Protection Storage Elevation Range: | High: | 366.00 | 0.0453 | 0.0000 | 0.0453 |
| | Low: | 361.00 | 0.0000 | 0.0000 | 0.0000 |
| | Diff. = | | 0.0453 | 0.0000 | 0.0453 |

Min. Channel Protection Volume required = 0.0451 ac-ft

Interpolated Volume Change = ( Higher Net Volume - Req'd Cp Volume over WQv)/Diff. In Volume in Range

Interpolated Volume Ratio = ( 0.0453 - 0.0451 )/ 0.0453

Interpolated Volume Ratio = 0.0038

Interpolated Elevation Change = 366.00 - ( 0.0038 x 5.00 )

Interpolated Elevation Change = 365.98 ft.

Minimum Channel Protection Volume High Elevation = 365.98 ft.

| Set Channel Protection Volume Elevation = 366.00 ft. |
|---|

| **Note: Total Storage at elevation: 366.00 is 0.0453 ac-ft, which is greater thai 0.0451 ac-ft.* |
|---|

## *Compute the required $Cp_V$-ED orifice:*

Required Cpv = 0.0451 ac-ft.

Average ED release rate = 0.0451 x 43560 $ft^2$/ac / (24 hr x 3600 sec/hr)

Average ED release rate = 0.02 cfs

*Size Cpv-ED orifice to release average of : 0.02 - 0.00 cfs

| Qavg = **0.02** cfs |
|---|

Average Cpv-ED orifice rate is:

Average head (h) = $(WQ_{VE} - WQ_{PPE})/2$

$$\text{Average h} = \frac{366.00 - 365.30}{2}$$

| Average h = 0.35 ft. |
|---|

***Use the orifice flow equation to calculate the required cross-sectional area and diameter for the $Cp_V$-ED orifice:*

[Q=ca(sq. rt. (2gh))]

where:

c = 0.61

g = 32.2

Average h = 0.35

sqrt(2gh) = 4.748

a= 0.008 sq. ft. ased upon: [a=Q/c (sq. rt. (2gh))]

Calculate diameter of pipe based upon area = D = 0.100 ft. ased upon: [D = sq. rt. (4a/3.15159)]

D = 1.200 in.

| For Design, Use a **3.00** in. dia. hole. |
|---|

(3" dia. is minimum as per Town Engineer)

Orifice centerline elevation = Orifice invert + (Orifice size in feet/2)

Orifice centerline elevation = 365.30 + 0.13

| Orifice centerline elevation = 365.43 ft. |
|---|

## *SPARACO & YOUNGBLOOD, PLLC*

Project: **Oak Tree (SY-1385)**
Location: **Haverstraw, NY**
JOB # SY-1385

By: SMS
Date: 6-Feb-20
Sub-Area: SITE-1A

## Outlet Structure - Elevation vs. Discharge Calculations

Known Data:

***Orifice #1:***

| | |
|---|---|
| Orifice Dia.: | 3.00 in. |
| Invert El.: | 365.30 ft. |
| Centerline El.: | 365.43 ft. |
| A= | 0.049 $ft^2$ |

***Orifice #2:***

| | |
|---|---|
| Orifice Dia.: | 0.00 in. |
| Invert El.: | 366.00 ft. |
| Centerline El.: | 366.00 ft. |
| A= | 0.000 $ft^2$ |

***Orifice #3:***

| | |
|---|---|
| Orifice Dia.: | 0.00 in. |
| Invert El.: | 366.00 ft. |
| Centerline El.: | 366.00 ft. |
| A= | 0.000 $ft^2$ |

***Spillway #1 (Weir):***

| | |
|---|---|
| Spillway Inv. Elev.: | 366.0 ft. |
| Spillway Top Elev.: | n/a ft. |
| Spillway Length: | 3.93 ft. |

***Spillway #2 (Top Struct.):***

| | |
|---|---|
| Spillway Inv. Elev.: | 0.0 ft. |
| Spillway Top Elev.: | n/a ft. |
| Spillway Length: | 5.00 ft. |

In Orifice Flow Eq. ;
Q=cA[sq. rt. (2gH)]

| | | |
|---|---|---|
| c= | 0.61 | (orifice #1) |
| c= | 0.61 | (orifice #2) |
| c= | 0.61 | (orifice #3) |
| c= | 0.61 | (orifice #4) |
| c= | 0.61 | (orifice #5) |
| g= | 32.2 | |
| H= | (See Below) | |

| | | |
|---|---|---|
| c= | 0.61 | (orifice #6) |
| c= | 0.61 | (orifice #7) |
| c= | 0.61 | (orifice #8) |
| c= | 0.61 | (orifice #9) |

In Weir Flow Eq. ;
Q=cLH**3/2

| | | | |
|---|---|---|---|
| c= | 3.0 | | |
| use L= | 3.9 | > than el. | 366.00 ft. |
| $H_4$= | (See Below) | | |

$H_1$= Height over orifice centerline
$H_2$= Height over orifice #2 centerline
$H_3$= Height over orifice #3 centerline
$H_4$= Height over orifice #4 invert
$H_{10}$= Height over spillway #1 elevation
$H_{11}$= Height over spillway #2 elevation

** c=0.61 for square-edged orifice*
*** c=0.98 for orifice with well-rounded entry*
*(Oct., 1959 Seelye Data Book for Civil Engineers)*

## Elevation vs. Discharge

| Elev. (ft.) | *Orifice Flows to Orifice #1* $H_1$ (ft.) | Flow (cfs) | *Orifice Flows to Orifice #2* $H_2$ (ft.) | Flow (cfs) | *Orifice Flows to Orifice #3* $H_3$ (ft.) | One Pipe Flow (cfs) | *Orifice Flows to Orifice #4* $H_5$ (ft.) | Flow (cfs) | *Weir Flows over Spillway #1* $H_{10}$ (ft.) | Flow (cfs) | *Weir Flows over Spillway #2* $H_{11}$ (ft.) | Flow (cfs) | Totals Cumulative Flow (cfs) |
|---|---|---|---|---|---|---|---|---|---|---|---|---|---|
| **365.30** | 0.0 | 0.00 | | | | | | | | | | | **0.00** |
| 365.50 | 0.0 | 0.00 | | | | | | | | | | | 0.00 |
| **365.70** | 0.3 | 0.13 | | | | | | | | | | | **0.13** |
| **365.90** | 0.5 | 0.17 | | | | | | | | | | | **0.17** |
| **366.10** | 0.7 | 0.20 | | | | | | | 0.1 | 0.37 | | | **0.57** |
| **366.30** | 0.9 | 0.22 | | | | | | | 0.3 | 1.94 | | | **2.16** |
| **366.50** | 1.1 | 0.25 | | | | | | | 0.5 | 4.17 | | | **4.42** |
| **366.70** | 1.3 | 0.27 | | | | | | | 0.7 | 6.90 | | | **7.18** |
| **366.90** | 1.5 | 0.29 | | | | | | | 0.9 | 10.07 | | | **10.36** |
| **367.10** | 1.7 | 0.31 | | | | | | | 1.1 | 13.60 | | | **13.91** |
| **367.30** | 1.9 | 0.33 | | | | | | | 1.3 | 17.48 | | | **17.80** |
| 367.40 | 2.0 | 0.34 | | | | | | | 1.4 | 19.53 | | | 19.87 |
| 367.60 | 2.2 | 0.35 | | | | | | | 1.6 | 23.86 | | | 24.22 |
| 367.80 | 2.4 | 0.37 | | | | | | | 1.8 | 28.47 | | | 28.84 |
| 367.90 | 2.5 | 0.38 | | | | | | | 1.9 | 30.88 | | | 31.26 |
| 368.00 | 2.6 | 0.39 | | | | | | | 2.0 | 33.35 | | | 33.73 |
| 368.10 | 2.7 | 0.39 | | | | | | | 2.1 | 35.88 | | | 36.27 |
| 368.20 | 2.8 | 0.40 | | | | | | | 2.2 | 38.47 | | | 38.87 |
| 368.30 | 2.9 | 0.41 | | | | | | | 2.3 | 41.12 | | | 41.53 |
| 368.40 | 3.0 | 0.41 | | | | | | | 2.4 | 43.84 | | | 44.25 |
| 368.50 | 3.1 | 0.42 | | | | | | | 2.5 | 46.60 | | | 47.03 |
| 368.60 | 3.2 | 0.43 | | | | | | | 2.6 | 49.43 | | | 49.86 |
| 368.70 | 3.3 | 0.43 | | | | | | | 2.7 | 52.31 | | | 52.74 |
| 368.80 | 3.4 | 0.44 | | | | | | | 2.8 | 55.24 | | | 55.68 |
| 368.90 | 3.5 | 0.45 | | | | | | | 2.9 | 58.23 | | | 58.67 |
| 369.00 | 3.6 | 0.45 | | | | | | | 3.0 | 61.26 | | | 61.72 |
| 369.10 | 3.7 | 0.46 | | | | | | | 3.1 | 64.35 | | | 64.81 |
| 369.20 | 3.8 | 0.47 | | | | | | | 3.2 | 67.49 | | | 67.96 |
| 369.30 | 3.9 | 0.47 | | | | | | | 3.3 | 70.68 | | | 71.15 |
| 369.40 | 4.0 | 0.48 | | | | | | | 3.4 | 73.91 | | | 74.39 |
| 369.50 | 4.1 | 0.49 | | | | | | | 3.5 | 77.20 | | | 77.68 |
| 369.60 | 4.2 | 0.49 | | | | | | | 3.6 | 80.53 | | | 81.02 |
| 369.70 | 4.3 | 0.50 | | | | | | | 3.7 | 83.91 | | | 84.41 |
| 369.80 | 4.4 | 0.50 | | | | | | | 3.8 | 87.34 | | | 87.84 |
| 369.90 | 4.5 | 0.51 | | | | | | | 3.9 | 90.81 | | | 91.31 |
| 370.00 | 4.6 | 0.51 | | | | | | | 4.0 | 94.32 | | | 94.83 |
| 370.10 | 4.7 | 0.52 | | | | | | | 4.1 | 97.88 | | | 98.40 |
| 370.20 | 4.8 | 0.53 | | | | | | | 4.2 | 101.48 | | | 102.01 |
| 370.30 | 4.9 | 0.53 | | | | | | | 4.3 | 105.13 | | | 105.66 |
| 370.40 | 5.0 | 0.54 | | | | | | | 4.4 | 108.82 | | | 109.35 |
| 370.50 | 5.1 | 0.54 | | | | | | | 4.5 | 112.55 | | | 113.09 |
| 370.60 | 5.2 | 0.55 | | | | | | | 4.6 | 116.32 | | | 116.87 |
| 370.70 | 5.3 | 0.55 | | | | | | | 4.7 | 120.13 | | | 120.68 |
| 370.80 | 5.4 | 0.56 | | | | | | | 4.8 | 123.99 | | | 124.54 |
| 370.90 | 5.5 | 0.56 | | | | 0.00 | | | 4.9 | 127.88 | | | 128.44 |

| Elev. Flow (cfs) | Orifice #1 Flow (cfs) | Orifice #2 Flow (cfs) | Orifice #3 Flow (cfs) | Weir #1 Flow (cfs) | Weir #2 Flow (cfs) | Total Flow (cfs) |
|---|---|---|---|---|---|---|

***SPARACO AND YOUNGBLOOD, PLLC***
P.O. Box #818, 18 North Main Street
Harriman, NY 10926
845-782-8543

# *WATER QUALITY CALCULATIONS*

| | |
|---|---|
| Project: | **Oak Tree SY#1385** |
| Location: | **Haverstraw, NY** |
| Drainage Sub-area: | **Site-3A** |
| Date: | **6-Feb-20** |
| By: | **SMS** |

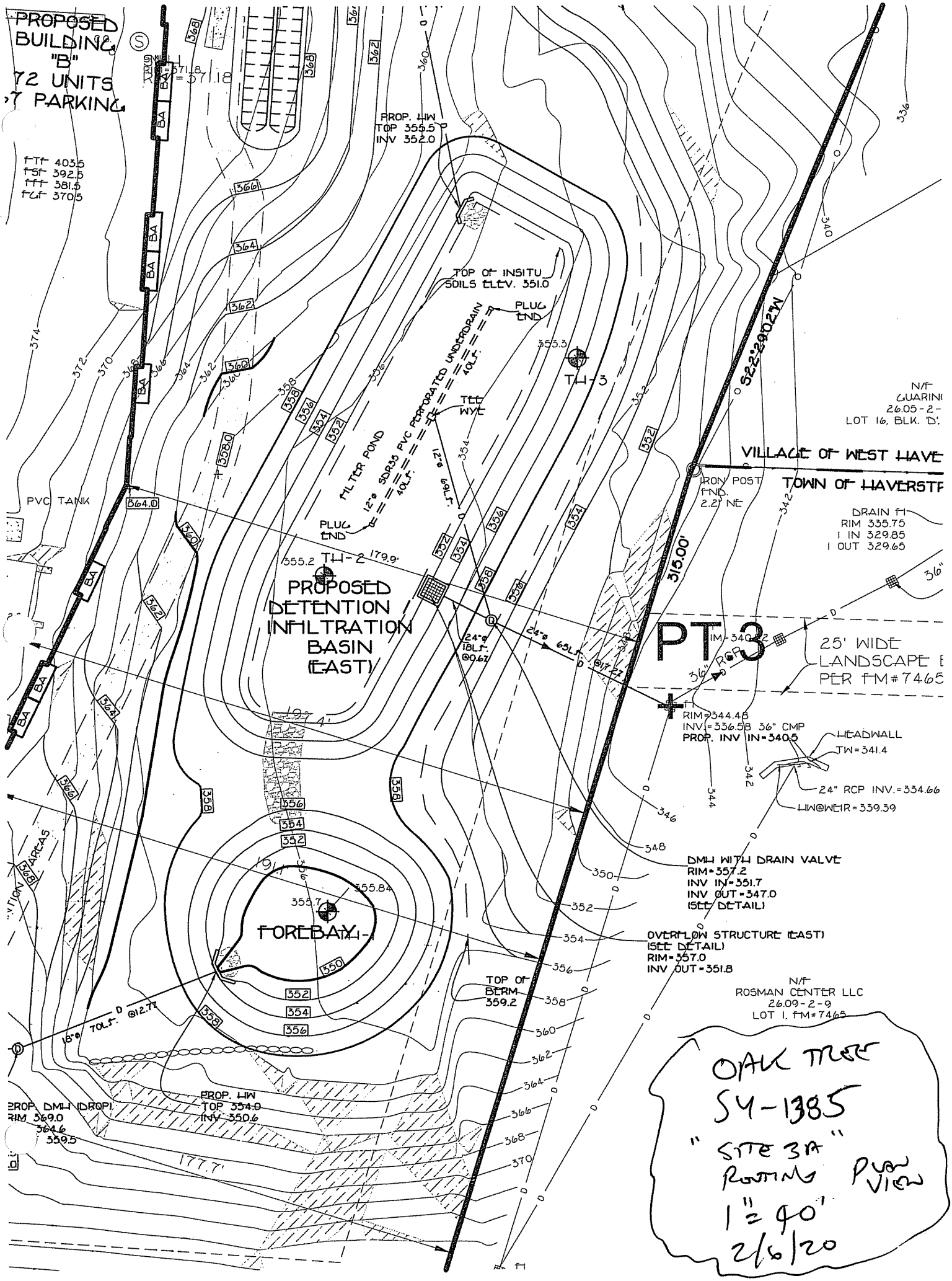
PROPOSED BUILDING "B" 72 UNITS 7 PARKING
FTF 403.5
FSF 392.5
FFF 381.5
FGF 370.5
PROP. HW TOP 355.5 INV 352.0
TOP OF INSITU SOILS ELEV. 351.0
PLUG END
TEE WYE
FILTER POND
12"ø SDR35 PVC PERFORATED UNDERDRAIN 40LF.
TH-3
TH-2
PROPOSED DETENTION INFILTRATION BASIN (EAST)
PVC TANK
PLUG END
24"ø 18LF. @0.6%
24"ø 65LF. @17.2%
S22°29'02"W
315.00'
N/F GUARINO 26.05-2- LOT 16, BLK. 'D'.
VILLAGE OF WEST HAVE
TOWN OF HAVERSTR
IRON POST FND. 2.2' NE
DRAIN FI RIM 335.75 I IN 329.85 I OUT 329.65
PT 3
25' WIDE LANDSCAPE E PER FM#7465
36" RCP
RIM=344.48 INV=336.58 36" CMP PROP. INV IN=340.5
HEADWALL TW=341.4
24" RCP INV.=334.66
HW@WEIR=339.39
DMH WITH DRAIN VALVE RIM=357.2 INV IN=351.7 INV OUT=347.0 (SEE DETAIL)
OVERFLOW STRUCTURE (EAST) (SEE DETAIL) RIM=357.0 INV OUT=351.8
N/F ROSMAN CENTER LLC 26.09-2-9 LOT 1, FM#7465
FOREBAY
TH-1
TOP OF BERM 359.2
18"ø 70LF. @12.7%
PROP. HW TOP 354.0 INV 350.6
PROP. DMH (DROP) RIM 369.0 364.6 359.5
177.7'
OAK TREE SY-1385 "SITE 3A" ROUTING PLAN VIEW 1" = 40' 2/6/20

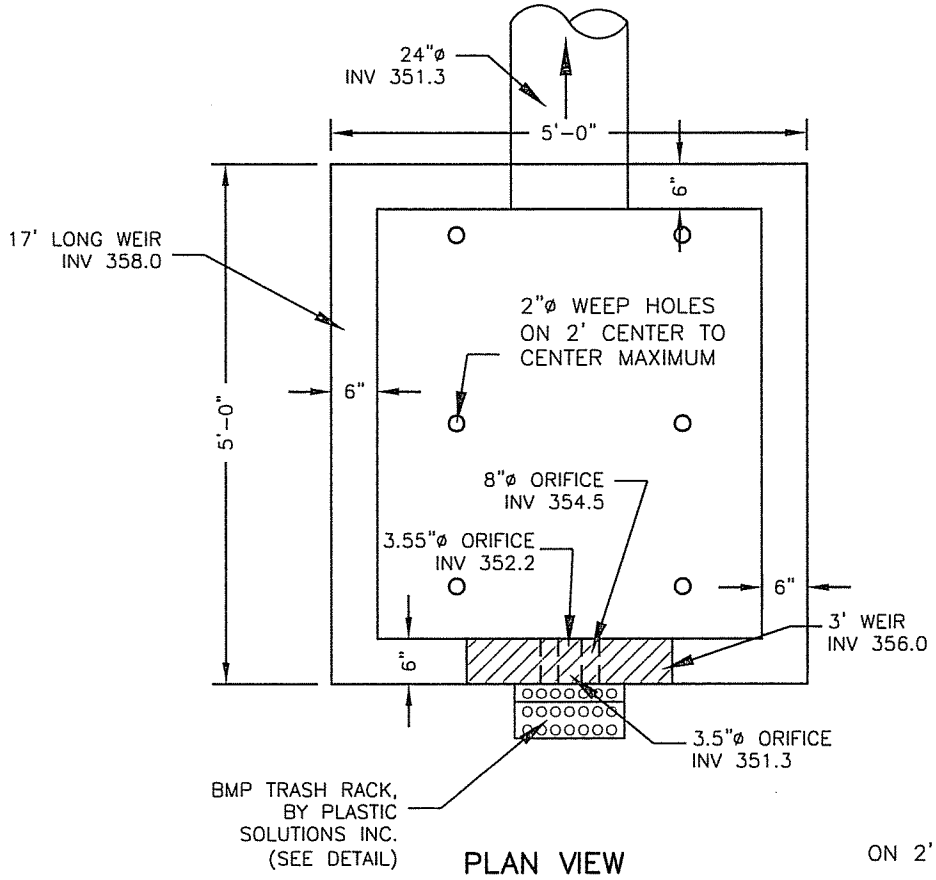


PLAN VIEW

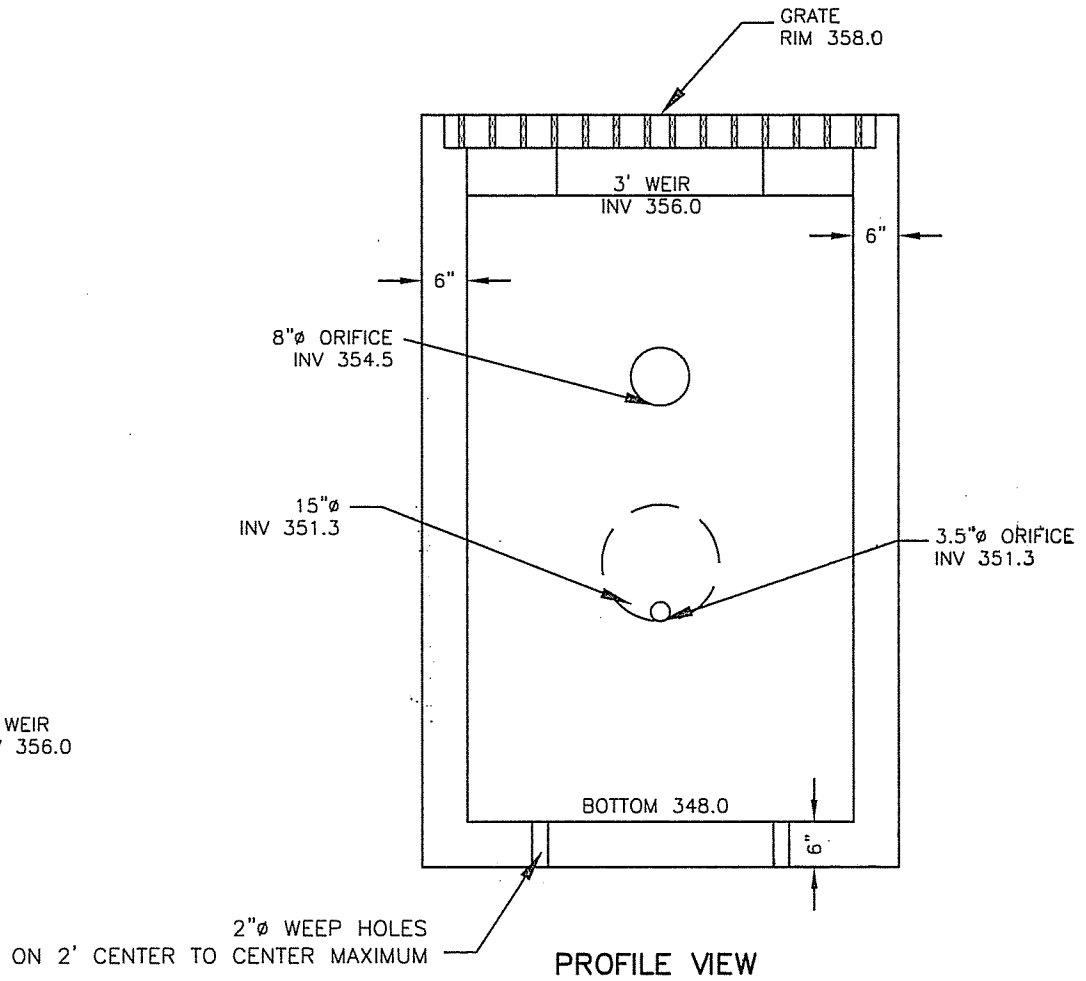


PROFILE VIEW

## OVERFLOW STRUCTURE (EAST) DETENTION BASIN

NTS

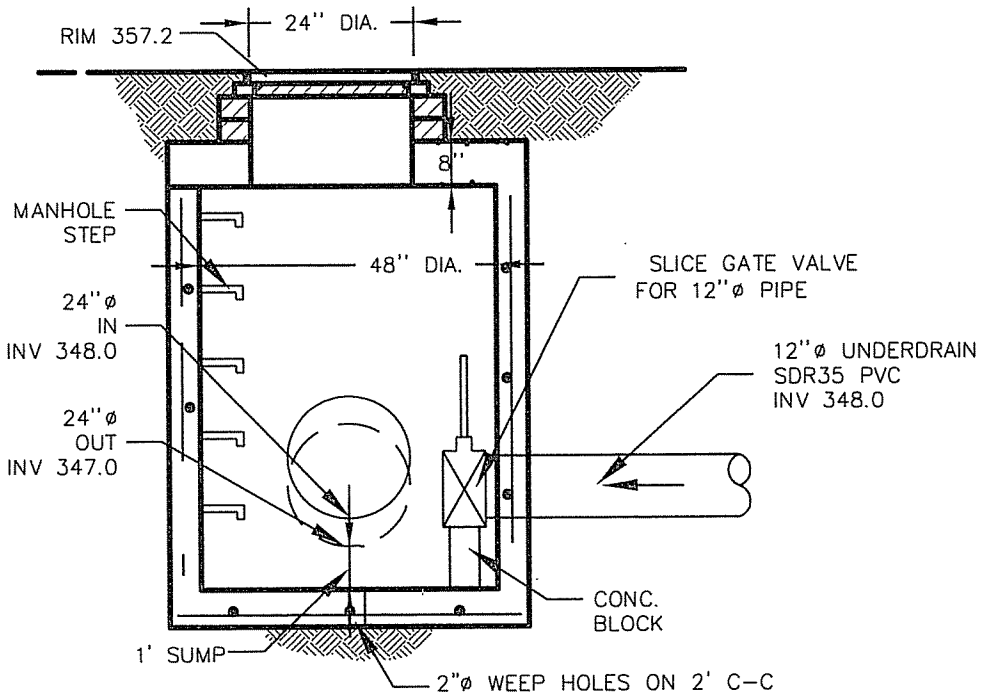


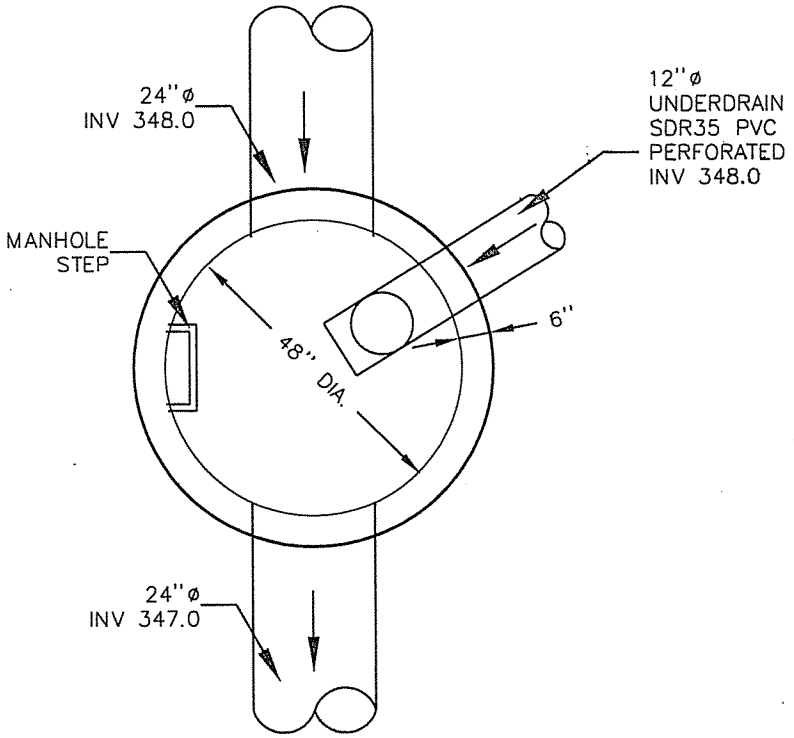


## UNDERDRAIN MANHOLE (EAST)

N.T.S.

*SPARACO & YOUNGBLOOD, PLLC*
18 NORTH MAIN STREET
HARRIMAN, NY 10926
845-782-8543

# Worksheet 2: Runoff Curve Number and Runoff

Project: **Oak Tree SY#1385** By: SMS Date: **6-Feb-20**

Location: **Haverstraw, NY** Checked: Date:

**Shade one:** Existing Developed CN for Sub-basin: *Site-3A*

## 1. Runoff Curve Number (CN)

| Soil name and hydrologic group (appendix A) | Cover Description (cover type, treatment, and hydrologic condition; percent impervious; unconnected / connected impervious area ratio) | CN Table 2-2 | CN Figure 2.3 | Figure 2.4 | Area ☒ acres ☐ $mi^2$ ☐ % | Product of CN X AREA |
|---|---|---|---|---|---|---|
| B | Woods - Good Condition | 55 | | | 0 | 0 |
| B | Lawn / Open Space - Good Condition | 61 | | | 0 | 0 |
| C | Woods - Good Condition | 70 | | | 0 | 0 |
| C | Lawn / Open Space - Good Condition | 74 | | | 0.46 | 34.04 |
| D | Woods - Good Condition | 77 | | | 0 | 0 |
| D | Lawn / Open Space - Good Condition | 80 | | | 0 | 0 |
| | Impervious Surfaces | 98 | | | 1.82 | 178.36 |
| | | | | Totals = | 2.28 | 212.4 |

CN (weighted) = total product / total area = 212.4 / 2.28 = 93.15789474

**Use CN =** **93**

## 2. Runoff

| | Storm #1 | Storm #2 | Storm #3 |
|---|---|---|---|
| Frequency | yr. | | |
| Rainfall, P (24 - hour) | in. | | |
| Runoff, Q | in. | | |

*(Use P and CN with table 2-1, fig. 2-1, or eqs. 2-3 and 2-4.)*

***SPARACO AND YOUNGBLOOD, PLLC***
P.O. Box #818, 18 North Main Street
Harriman, NY 10926
845-782-8543

## Worksheet 4: Graphical Peak Discharge Method

Project: **Oak Tree SY#1385** By: SMS
Location: **Haverstraw, NY** Date: 6-Feb-20

**Shade one:** Existing **Developed** $q_p$ req'd for Sub-basin: *Site-3A*

1. Data:

Drainage Area.....Am = 0.0036 $mi^2$ (acres/640)
Runoff Curve Number.....CN = 93 From Worksheet #2 (or calibrated Hec-1 Curve Number)
Time of Concentration.....$T_c$ = 0.083 hr (From Worksheet #3)
Runoff Distribution Type..... = III (I, IA, II, III)
Pond and Swamp areas spread throughout watershed.....= 0 percent of $A_m$ (% acres or mi2 covered)

| | | Storm # 1 | Storm # 2 | Storm # 3 |
|---|---|---|---|---|
| 2. | Frequency..... yr. | 1 | | |
| 3. | Rainfall, P (24 - hour)..... in. | 2.5 | | |
| 4. | Initial Abstraction, $I_a$ ..... in. [$I_a$ = 0.2*S] [S = 1000/CN -10]. . . 0.73 | 0.147 | | |
| 5. | Compute $I_a$/P..... in. | 0.059 | | |
| 6. | Unit Peak Discharge, qu..... csm/in. (Use Tc and Ia/P with exhibit 4-III) | 650 | | |
| 7. | Runoff, Q ..... in. [$Q=(P-0.2S)^2/(P-0.8S)$] | 1.79 | | |
| 8. | Pond and Swamp Adjustment Factor, $F_p$. . . % (Use percent pond and swamp area with Table 4-2. Factor is 1.0 for zero percent pond and swamp area.) | 1 | | |
| 9. | Peak Discharge, $q_p$..... cfs (Where $q_p=q_u A_m Q F_p$) | 4.2 | | |

Oak Tree SY#1385
6-Feb-20

***Forebay Pond Volume for: Site-3A***

| STAGE (elev. In ft.) | DIFFERENCE IN STAGE EL. (ft.) | AREA OF CONTOUR (ft2) | AVG. AREA OF CONTOUR (ft2) | VOLUME SYSTEM (cubic feet) | VOLUME SYSTEM (ac-ft) | |
|---|---|---|---|---|---|---|
| 350.00 | | 1397.00 | | | | |
| | 2.00 | | 1161.00 | 2322 | 0.0533 | |
| 352.00 | | 2322.00 | | | | |
| | 2.00 | | 1715.00 | 3430 | 0.0787 | |
| 354.00 | | 3430.00 | | | | |
| | 2.00 | | 2415.00 | 4830 | 0.1109 | |
| 356.00 | | 4830.00 | | | | |
| | | | | | 0.2429 | Total Volume Forebay |

***Detention Pond Volume for: Site-3A***

| STAGE (elev. In ft.) | DIFFERENCE IN STAGE EL. (ft.) | AREA OF CONTOUR (ft2) | AVG. AREA OF CONTOUR (ft2) | VOLUME SYSTEM (cubic feet) | VOLUME SYSTEM (ac-ft) | VOLUME SYSTEM (ac-ft) | |
|---|---|---|---|---|---|---|---|
| 350.00 | | 0.00 | | | | | |
| | 1.00 | | 3764.50 | 3764.5 | 0.0864 | 0.0864 | |
| 351.00 | | 7529.00 | | | | | |
| | 1.00 | | 4416.00 | 4416 | 0.1014 | 0.1878 | |
| 352.00 | | 8832.00 | | | | | |
| | 2.00 | | 5806.50 | 11613 | 0.2666 | 0.4544 | |
| 354.00 | | 11613.00 | | | | | |
| | 2.00 | | 7310.00 | 14620 | 0.3356 | 0.7900 | |
| 356.00 | | 14620.00 | | | | | |
| | 2.00 | | 12778.50 | 25557 | 0.5867 | 1.3767 | |
| 358.00 | | 25557.00 | | | | | |
| | 0.50 | | 13938.50 | 6969.25 | 0.1600 | 1.5367 | |
| 358.50 | | 27877.00 | | | | | |
| | | | | | 1.5367 | 1.5367 | Total Volume Pond |

## *SEEPAGE BASIN DATA:*

**Outflow:**

*Stage 0.1 Only*

Seepage Area (A) = Exterior Area of Base

Stages 1-8

Seepage Area (A) = Sum ( Previous Seepage Area)

Percolation Rate (V) = 1 inch per 60 Minutes
= 0.000023 ft/sec

Outflow Rate (Q) = Seepage Area (A) x Percolation Rate (V)

*Basin Outflow:*

**SEEPAGE BASIN STAGE VS. OUTFLOW**

| Stage | Elev. | Seepage Area (ft²) | Percolation Rate (feet/sec) | Outflow Rate (cfs) |
|---|---|---|---|---|
| 0.00 | 350.00 | - | 0.000023 | 0.00000 |
| 1 | 351.00 | 7,529.0 | 0.000023 | **0.17428** |
| 2 | 352.00 | 8,832.0 | 0.000023 | 0.20444 |
| 3 | 354.00 | 11,613.0 | 0.000023 | 0.26882 |
| 4 | 356.00 | 14,620.0 | 0.000023 | 0.33843 |
| 5 | 358.00 | 25,557.0 | 0.000023 | 0.59160 |
| 6 | 358.50 | 27,877.0 | 0.000023 | 0.64530 |

*Use the bottom of Basin for Outflow Rate for conservative result.

***SPARACO AND YOUNGBLOOD, PLLC***
P.O. Box #818, 18 North Main Street
Harriman, NY 10926
845-782-8543

# Summary Table #WQ-1:Water Quality Volume Calculations

Project: **Oak Tree SY#1385**
Location: **Haverstraw, NY**
JOB # SY-1385

By: SMS
Rev. Date: 6-Feb-20

## *Water Quality Calculations*

*NYSDEC Required Storage Volume:*

Sub-Area: *Site-3A*

Data:

P: 1.3 = 90% Rainfall Event Number from Figure #1
Rv: 0.768421 = 0.05 + 0.009(I) (Min. Rv =0.2) Use Rv = 0.768421053
I: 79.82 = Impervious coverage percentage
A: 2.28 = Site Area to Basin (in acres)

WQv: **0.190** = Req'd Water Quality Volume (in ac-ft)

$$= \frac{(P)(Rv)(A)}{12}$$

Pre Treatment required (20% if percolation rate less than 2-inches per hour and 100% if less than 2-inches per hour):

Percolation Rate: 60 minutes for 1 inch drop.
Volume percentage required: 100 percent

Pre-treatment volume Req'd: 0.190 ac-ft
Pre-treatment Vol. provided: 0.243 ac-ft ok

## ***Set required WQv Elev:***

| | | Elev. (ft.) | Cumulative Volume |
|---|---|---|---|
| Infiltration System Invert Elevation ($I_{EL}$) = | | 350.0 | (ac-ft) |
| Water Quality Storage Elevation Range: | High: | 353.00 | 0.4544 |
| | Low: | 350.00 | 0.0000 |
| | | Diff. = | 0.4544 |

Minimum WQ Volume required above permanent pool = **0.1898** ac-ft

Interpolated Volume Change = ( Higher Cumulative Volume - Req'd WQ Volume over Perm. Pool)/Diff. In Volume in Range

Interpolated Volume Change = ( 0.4544 - 0.1898 )/ 0.4544

Interpolated Volume Ratio = 0.5823

Interpolated Elevation Change = 353.00 - ( 0.5823 x 3.00 )

Interpolated Elevation Change = 351.25 ft.

Minimum Water Quality Volume High Elevation = 351.25 ft.

Set Water Quality Volume Elevation = 351.30 ft.

**Note: Total Storage at elevation: 351.30 is 0.1969 ac-ft, which is greater than req. 0.1898 ac-ft.* ok

***SPARACO AND YOUNGBLOOD, PLLC***
P.O. Box #818, 18 North Main Street
Harriman, NY 10926
845-782-8543

## Summary Table #WQ-2:Runoff Reduction Volume Calculations

Project: **Oak Tree SY#1385**
Location: **Haverstraw, NY**
JOB # SY-1385

By: SMS
Rev. Date: 6-Feb-20

***Runoff Reduction Volume Calculations***

*NYSDEC Required Runoff Reduction Volume for :* Sub-Area: *Site-3A*

Data: Entire Subarea

| | | |
|---|---|---|
| P: | 1.3 | = 90% Rainfall Event Number from Figure #1 |
| Rv: | 0.950 | = 0.05 + 0.009(I) (I=100 percent) |
| Aic: | 1.82 | = Impervious cover targeted for runoff reduction (in acres) |
| Ai: | 0.546 | = (S)(Aic) (in acres) |
| S: | 0.3 | = Hydrologic Soil Group (HSG) Specific Reduction Factor |

HSG Type "A" = 0.55
HSG Type "B" = 0.4
HSG Type "C" = 0.3
HSG Type "D" = 0.2

$RR_{V1}$: **0.056** = Req'd Runoff Reduction Volume (in ac-ft)
$= \frac{(P)(Rv)(Ai)}{12}$

Provided Volume in Retention system: **0.197 ac-ft** *up to WQv Elevation.* **ok, greater than required $RR_{v1}$:**

***Note: Current NYSDEC regulations allow RRv for 100% of WQv when using infiltration practices.**

*Total Available Volume in system:* *1.537 ac-ft*

***SPARACO AND YOUNGBLOOD, PLLC***
P.O. Box #818, 18 North Main Street
Harriman, NY 10926
845-782-8543

## Channel Protection Storage Volume ($Cp_V$): Calculation:

Project: **Oak Tree SY#1385** By: SMS
Location: **Haverstraw, NY** Date: 6-Feb-20

Data:

Water Quality Orifice Invert. . . . . = 350.00 ft.
Water Quality Storage Elevation. . . . . = 351.30 ft.

| | | Sub-basin: | Site-3A |
|---|---|---|---|
| 1. Unit Peak Discharge, $q_u$. . . . . = | (csm/in.) | | 650 |
| Duration Time, T.....T = | (hr .) | | 24 |
| Runoff, Q . . . . . = | (in.) | | 1.79 |
| Drainage Area.....Am = | ($mi^2$ ) | | 0.0036 |
| Drainage Area (in acres) = $A_m$ x 640 = A = | (acres) | | 2.28 |

2. Find ($q_o/q_i$) from Figure 8.5. . . . . 0.03
($q_o/q_i$ = Peak outflow/Peak Inflow discharge)

3. Calculate $V_s/V_r$ 0.642
[$V_s/V_r = 0.683-1.43(q_o/q_i) + 1.64 (q_o/q_i)^2 -0.804 (q_o/q_i)^3$]

| | | | Total $V_s$ | |
|---|---|---|---|---|
| 4. Solve for $V_s$ | (ac-ft) | 0.2186 | **0.2186** | (ac-ft) |
| [$V_s=Cp_v = (V_s/V_r)$ x Q x A/12] | (cubic ft.) | 9,522 | 9522 | (cubic ft.) |

5. Compute Average Release Rate = $Q_{AVG}$ 0.11 (cfs)
[$Q_{AVG} = V_s$ /T*3600 sec/hr]

## *Calculate Required Channel Protection Volume Elevation (Cp $_V$ E):*

| | | Elev. (ft.) | Cumulative Volume (ac-ft) | Actual WQ Volume Reserved (ac-ft) | Net Volume (ac-ft) |
|---|---|---|---|---|---|
| Water Quality Volume Elevation ($WQ_{vE}$) = | | 351.30 | | | |
| Channel Protection Storage Elevation Range: | High: | 353.00 | 0.4544 | 0.0000 | 0.4544 |
| | Low: | 350.00 | 0.0000 | 0.0000 | 0.0000 |
| | Diff. = | | 0.4544 | 0.0000 | 0.4544 |

Min. Channel Protection Volume required = 0.2186 ac-ft

Interpolated Volume Change = ( Higher Net Volume - Req'd Cp Volume over WQv)/Diff. In Volume in Range
Interpolated Volume Ratio = ( 0.4544 - 0.2186 )/ 0.4544
Interpolated Volume Ratio = 0.5189

Interpolated Elevation Change = 353.00 - ( 0.5189 x 3.00 )
Interpolated Elevation Change = 351.44 ft.

Minimum Channel Protection Volume High Elevation = 351.44 ft.

Set Channel Protection Volume Elevation = 351.50 ft.

**Note: Total Storage at elevation: 351.50 is 0.2272 ac-ft, which is greater thai 0.2186 ac-ft.*

## *Compute the required Cp $_V$ -ED orifice:*

Required Cpv = 0.2186 ac-ft.
Average ED release rate = 0.2186 x 43560 ft$^2$/ac / (24 hr x 3600 sec/hr)
Average ED release rate = 0.11 cfs

*Size Cpv-ED orifice
to release average of : 0.11 - 0.00 cfs

Qavg = **0.11** cfs

Average Cpv-ED orifice rate is:
Average head (h) = $(WQ_{VE} - WQ_{PPE})/2$

$$\text{Average h} = \frac{351.50 - 351.30}{2}$$

Average h = 0.10 ft.

### ***Use the orifice flow equation to calculate the required cross-sectional area and diameter for the Cp $_V$ -ED orifice:*

[Q=ca(sq. rt. (2gh))]
where:
c = 0.61
g = 32.2
Average h = 0.10
sqrt(2gh) = 2.538
a= 0.071 sq. ft.
Based upon: [a=Q/c (sq. rt. (2gh))]

Calculate diameter of pipe based upon area = D = 0.301 ft.
D = 3.613 in.
Based upon: [D = sq. rt. (4a/3.15159)]

For Design, Use a **3.50** in. dia. hole. (1" dia. is minimum as per NYSDEC)

Orifice centerline elevation = Orifice invert + (Orifice size in feet/2)
Orifice centerline elevation = 351.30 + 0.15

Orifice centerline elevation = 351.45 ft.

## *SPARACO & YOUNGBLOOD, PLLC*

Project: **Oak Tree SY#1385**
Location: **Town of Haverstraw, NY**
JOB # SY-1385

By: SMS
Date: 6-Feb-20
Sub-Area: Site-3A

## Outlet Structure - Elevation vs. Discharge Calculations

Known Data:

***Orifice #1:***

| | | |
|---|---|---|
| Orifice Dia.: | 3.50 | in. |
| Invert El.: | 351.30 | ft. |
| Centerline El.: | 351.45 | ft. |
| A= | 0.067 | $ft^2$ |

***Orifice #2:***

| | | |
|---|---|---|
| Orifice Dia.: | 8.00 | in. |
| Invert El.: | 354.50 | ft. |
| Centerline El.: | 354.83 | ft. |
| A= | 0.349 | $ft^2$ |

***Orifice #3:***

| | | |
|---|---|---|
| Orifice Dia.: | 0.00 | in. |
| Invert El.: | 355.00 | ft. |
| Centerline El.: | 355.00 | ft. |
| A= | 0.000 | $ft^2$ |

***Spillway #1 (Weir):***

| | | |
|---|---|---|
| Spillway Inv. Elev.: | 356.0 | ft. |
| Spillway Top Elev.: | n/a | ft. |
| Spillway Length: | 3.00 | ft. |

***Spillway #2 (Top Struct.):***

| | | |
|---|---|---|
| Spillway Inv. Elev.: | 358.0 | ft. |
| Spillway Top Elev.: | n/a | ft. |
| Spillway Length: | 17.00 | ft. |

In Orifice Flow Eq. ;
Q=cA[sq. rt. (2gH)]

| | | |
|---|---|---|
| c= | 0.61 | (orifice #1) |
| c= | 0.61 | (orifice #2) |
| c= | 0.61 | (orifice #3) |
| c= | 0.61 | (orifice #4) |
| c= | 0.61 | (orifice #5) |
| g= | 32.2 | |
| H= | (See Below) | |

| | | |
|---|---|---|
| c= | 0.61 | (orifice #6) |
| c= | 0.61 | (orifice #7) |
| c= | 0.61 | (orifice #8) |
| c= | 0.61 | (orifice #9) |

In Weir Flow Eq. ;
Q=cLH**3/2

| | | | |
|---|---|---|---|
| c= | 3.0 | | |
| use L= | 3.0 | > than el. | 356.00 ft. |
| $H_4$= | (See Below) | | |

$H_1$= Height over orifice centerline
$H_2$= Height over orifice #2 centerline
$H_3$= Height over orifice #3 centerline
$H_4$= Height over orifice #4 invert
$H_{10}$= Height over spillway #1 elevation
$H_{11}$= Height over spillway #2 elevation

** c=0.61 for square-edged orifice*
*** c=0.98 for orifice with well-rounded entry*
*(Oct., 1959 Seelye Data Book for Civil Engineers)*

## Elevation vs. Discharge

| | *Orifice Flows to Orifice #1* | | *Orifice Flows to Orifice #2* | | *Orifice Flows to Orifice #3* | | | *Orifice Flows to Orifice #4* | | | *Weir Flows over Spillway #1* | | *Weir Flows over Spillway #2* | | Totals |
|---|---|---|---|---|---|---|---|---|---|---|---|---|---|---|---|
| Elev. (ft.) | $H_1$ (ft.) | Flow (cfs) | $H_2$ (ft.) | Flow (cfs) | $H_3$ (ft.) | One Pipe Flow (cfs) | | $H_5$ (ft.) | Flow (cfs) | Flow (cfs) | $H_{10}$ (ft.) | Flow (cfs) | $H_{11}$ (ft.) | Flow (cfs) | Cumulative Flow (cfs) |
| **351.30** | 0.0 | 0.00 | | | | | | | | | | | | | **0.00** |
| **351.50** | 0.1 | 0.08 | | | | | | | | | | | | | **0.08** |
| 351.70 | 0.3 | 0.16 | | | | | | | | | | | | | 0.16 |
| 351.90 | 0.5 | 0.22 | | | | | | | | | | | | | 0.22 |
| 352.10 | 0.7 | 0.26 | | | | | | | | | | | | | 0.26 |
| 352.30 | 0.9 | 0.30 | | | | | | | | | | | | | 0.30 |
| 352.50 | 1.1 | 0.34 | | | | | | | | | | | | | 0.34 |
| 352.70 | 1.3 | 0.37 | | | | | | | | | | | | | 0.37 |
| 352.90 | 1.5 | 0.39 | | | | | | | | | | | | | 0.39 |
| 353.10 | 1.7 | 0.42 | | | | | | | | | | | | | 0.42 |
| 353.30 | 1.9 | 0.45 | | | | | | | | | | | | | 0.45 |
| 353.40 | 2.0 | 0.46 | | | | | | | | | | | | | 0.46 |
| 353.50 | 2.1 | 0.47 | | | | | | | | | | | | | 0.47 |
| 353.60 | 2.2 | 0.48 | | | | | | | | | | | | | 0.48 |
| 353.80 | 2.4 | 0.50 | | | | | | | | | | | | | 0.50 |
| 354.00 | 2.6 | 0.52 | | | | | | | | | | | | | 0.52 |
| 354.20 | 2.8 | 0.54 | | | | | | | | | | | | | 0.54 |
| 354.40 | 3.0 | 0.56 | | | | | | | | | | | | | 0.56 |
| 354.60 | 3.2 | 0.58 | | | | | | | | | | | | | 0.58 |
| **354.80** | 3.4 | 0.60 | | | | | | | | | | | | | **0.60** |
| **355.00** | 3.6 | 0.62 | 0.2 | 0.70 | | | | | | | | | | | **1.31** |
| 355.20 | 3.8 | 0.63 | 0.4 | 1.03 | | | | | | | | | | | 1.67 |
| 355.40 | 4.0 | 0.65 | 0.6 | 1.29 | | | | | | | | | | | 1.94 |
| 355.60 | 4.2 | 0.67 | 0.8 | 1.50 | | | | | | | | | | | 2.16 |
| 355.80 | 4.4 | 0.68 | 1.0 | 1.68 | | | | | | | | | | | 2.36 |
| **356.00** | 4.6 | 0.70 | 1.2 | 1.85 | | | | | | | 0.0 | 0.00 | | | **2.54** |
| **356.20** | 4.8 | 0.71 | 1.4 | 2.00 | | | | | | | 0.2 | 0.80 | | | **3.52** |
| 356.40 | 5.0 | 0.73 | 1.6 | 2.14 | | | | | | | 0.4 | 2.28 | | | 5.14 |
| 356.60 | 5.2 | 0.74 | 1.8 | 2.27 | | | | | | | 0.6 | 4.18 | | | 7.20 |
| 356.80 | 5.4 | 0.76 | 2.0 | 2.40 | | | | | | | 0.8 | 6.44 | | | 9.59 |
| 357.00 | 5.6 | 0.77 | 2.2 | 2.52 | | | | | | | 1.0 | 9.00 | | | 12.29 |
| 357.20 | 5.8 | 0.78 | 2.4 | 2.63 | | | | | | | 1.2 | 11.83 | | | 15.24 |
| 357.40 | 6.0 | 0.80 | 2.6 | 2.74 | | | | | | | 1.4 | 14.91 | | | 18.44 |
| 357.60 | 6.2 | 0.81 | 2.8 | 2.84 | | | | | | | 1.6 | 18.21 | | | 21.87 |
| 357.80 | 6.4 | 0.82 | 3.0 | 2.94 | | | | | | | 1.8 | 21.73 | | | 25.50 |
| **358.00** | 6.6 | 0.84 | 3.2 | 3.04 | | | | | | | 2.0 | 25.46 | 0.0 | 0.00 | **29.33** |
| **358.20** | 6.8 | 0.85 | 3.4 | 3.14 | | | | | | | 2.2 | 29.37 | 0.2 | 4.56 | **37.92** |
| **358.40** | 7.0 | 0.86 | 3.6 | 3.23 | | | | | | | 2.4 | 33.46 | 0.4 | 12.90 | **50.45** |
| **358.60** | 7.2 | 0.87 | 3.8 | 3.32 | | | | | | | 2.6 | 37.73 | 0.6 | 23.70 | **65.63** |
| 358.80 | 7.4 | 0.89 | 4.0 | 3.40 | | | | | | | 2.8 | 42.17 | 0.8 | 36.49 | 82.95 |
| 359.00 | 7.6 | 0.90 | 4.2 | 3.49 | | | | | | | 3.0 | 46.77 | 1.0 | 51.00 | 102.15 |
| 359.20 | 7.8 | 0.91 | 4.4 | 3.57 | | | | | | | 3.2 | 51.52 | 1.2 | 67.04 | 123.04 |
| 359.40 | 8.0 | 0.92 | 4.6 | 3.65 | | | | | | | 3.4 | 56.42 | 1.4 | 84.48 | 145.48 |
| 359.60 | 8.2 | 0.93 | 4.8 | 3.73 | | | | | | | 3.6 | 61.47 | 1.6 | 103.22 | 169.36 |
| 359.80 | 8.4 | 0.95 | 5.0 | 3.81 | | | | | | | 3.8 | 66.67 | 1.8 | 123.16 | 194.58 |

| Elev. Flow (cfs) | Orifice #1 Flow (cfs) | Orifice #2 Flow (cfs) | Orifice #3 Flow (cfs) | Weir #1 Flow (cfs) | Weir #2 Flow (cfs) | Total Flow (cfs) |
|---|---|---|---|---|---|---|

***SPARACO AND YOUNGBLOOD, PLLC***
P.O. Box #818, 18 North Main Street
Harriman, NY 10926
845-782-8543

# *WATER QUALITY CALCULATIONS*

| | |
|---|---|
| Project: | **Oak Tree** |
| Location: | **Haverstraw, NY** |
| Drainage Sub-area: | **Site-5A** |
| Date: | **6-Feb-20** |
| By: | **SMS** |

***SPARACO AND YOUNGBLOOD, PLLC***
P.O. Box #818, 18 North Main Street
Harriman, NY 10926
845-782-8543

## Worksheet 4: Graphical Peak Discharge Method

Project: **Oak Tree** By: SMS
Location: **Haverstraw, NY** Date: 6-Feb-20

**Shade one:** Existing **Developed** $q_p$ req'd for Sub-basin: *Site-5A*

1. Data:

Drainage Area.....Am = 0.0067 $mi^2$ (acres/640)
Runoff Curve Number.....CN = 93 From Worksheet #2 (or calibrated Hec-1 Curve Number)
Time of Concentration.....$T_c$ = 0.083 hr (From Worksheet #3)
Runoff Distribution Type..... = III (I, IA, II, III)
Pond and Swamp areas spread throughout watershed.....= 0 percent of $A_m$ (% acres or mi2 covered)

| | | Storm #1 | Storm #2 | Storm #3 |
|---|---|---|---|---|
| 2. | Frequency..... yr. | 1 | | |
| 3. | Rainfall, P (24 - hour)..... in. | 2.5 | | |
| 4. | Initial Abstraction, $I_a$ ..... in. [$I_a$ = 0.2*S] [S = 1000/CN -10]....0.75 | 0.151 | | |
| 5. | Compute $I_a$/P..... in. | 0.060 | | |
| 6. | Unit Peak Discharge, qu.....csm/in. (Use Tc and Ia/P with exhibit 4-III) | 650 | | |
| 7. | Runoff, Q ..... in. [$Q=(P-0.2S)^2/(P-0.8S)$] | 1.78 | | |
| 8. | Pond and Swamp Adjustment Factor, $F_p$... % (Use percent pond and swamp area with Table 4-2. Factor is 1.0 for zero percent pond and swamp area.) | 1 | | |
| 9. | Peak Discharge, $q_p$.....cfs (Where $q_p=q_u A_m Q F_p$) | 7.7 | | |

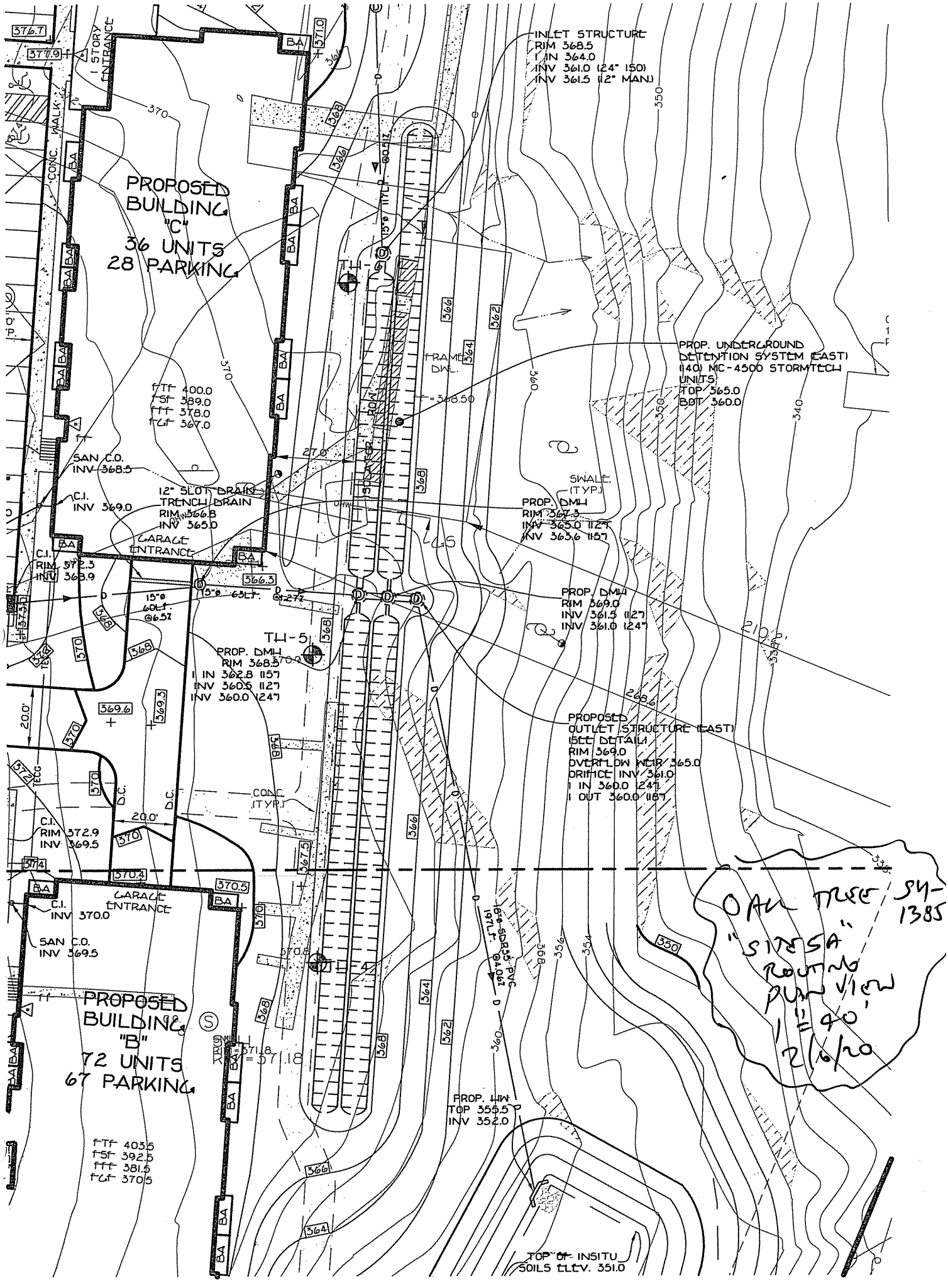

INLET STRUCTURE
RIM 368.5
1 IN 364.0
INV 361.0 (24" ISO)
INV 361.5 (12" MAN.)
PROPOSED BUILDING "C" 36 UNITS 28 PARKING
1 STORY ENTRANCE
CONC. WALK
FTF 400.0
FSF 389.0
FFF 378.0
FGF 367.0
SAN C.O. INV 368.5
C.I. INV 369.0
12" SLOT DRAIN
TRENCH DRAIN
RIM 366.8
INV 365.0
GARAGE ENTRANCE
C.I. RIM 372.3 INV 368.9
15"Ø 60LF. @6.5%
15"Ø 63LF. @1.27%
TH-5
PROP. DMH
RIM 368.5
1 IN 362.8 (15")
INV 360.5 (12")
INV 360.0 (24")
TH-6
FRAME DWL.
PROP. UNDERGROUND DETENTION SYSTEM (EAST) (140) MC-4500 STORMTECH UNITS
TOP 365.0
BOT 360.0
SWALE (TYP.)
PROP. DMH
RIM 367.3
INV 365.0 (12")
INV 363.6 (15")
PROP. DMH
RIM 369.0
INV 361.5 (12")
INV 361.0 (24")
PROPOSED OUTLET STRUCTURE (EAST) (SEE DETAIL)
RIM 369.0
OVERFLOW WEIR 365.0
ORIFICE INV 361.0
1 IN 360.0 (24")
1 OUT 360.0 (18")
CONC. (TYP.)
C.I. RIM 372.9 INV 369.5
GARAGE ENTRANCE
C.I. INV 370.0
SAN C.O. INV 369.5
PROPOSED BUILDING "B" 72 UNITS 67 PARKING
FTF 403.5
FSF 392.5
FFF 381.5
FGF 370.5
PROP. HW
TOP 355.5
INV 352.0
TOP OF INSITU SOILS ELEV. 351.0
OAK TREE SY-1385
"SITE 5A" ROUTING PLAN VIEW
1" = 40'
2/6/20

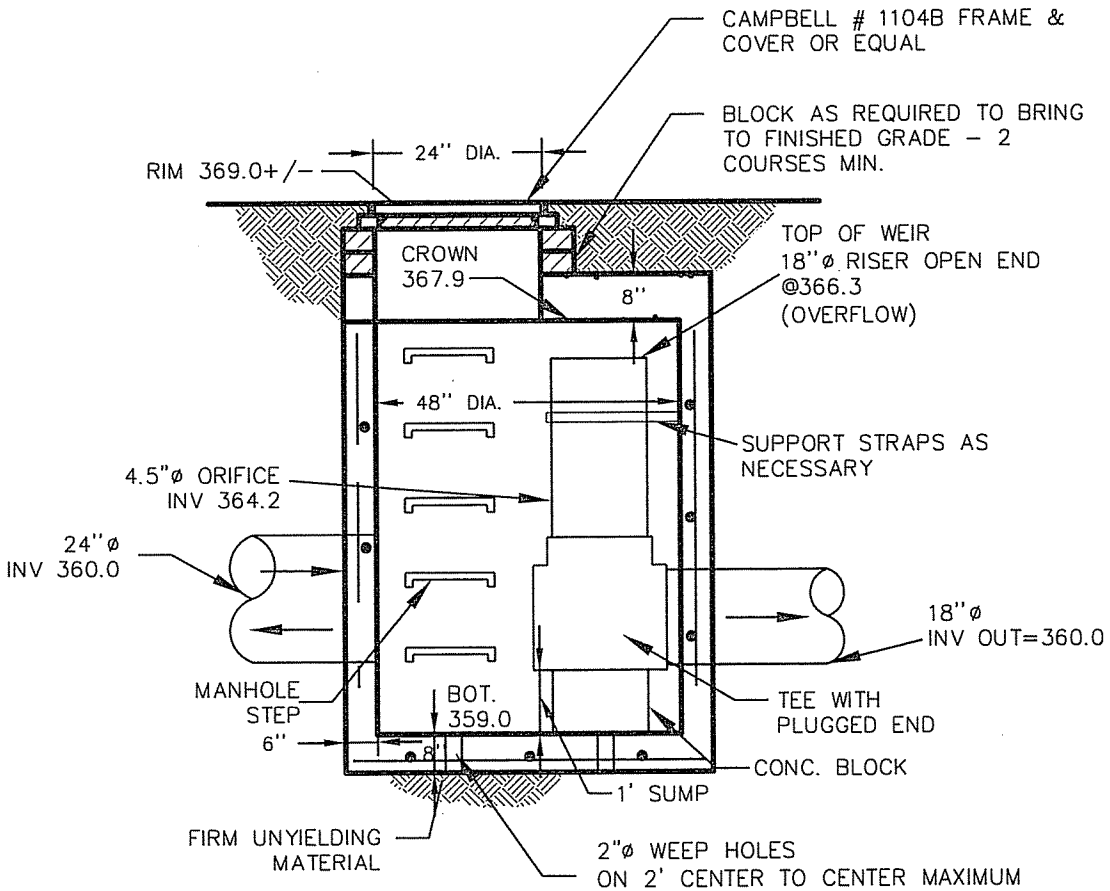


PROFILE VIEW

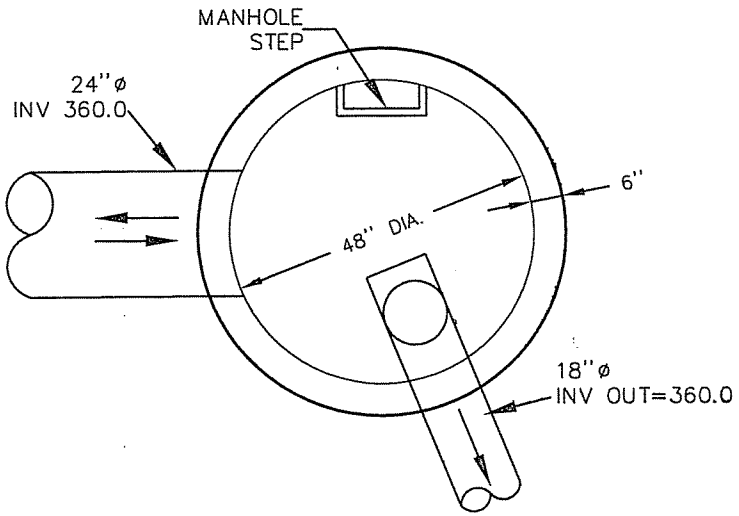


PLAN VIEW

NOTES:

1. MANHOLE TO CONFORM TO A.S.T.M. C478 (LATEST REVISION).
2. PRECAST CONCRETE MANHOLES WITH RESILENT SEALS AT JOINTS.
3. MANUFACTURER SHALL CERTIFY ALL COMPONENTS MANHOLE FOR HS20 LOADING
4. RISER SECTION JOINTS SHALL BE FIELD–MORTARED

## OUTLET STRUCTURE (EAST)–MC4500

N.T.S.

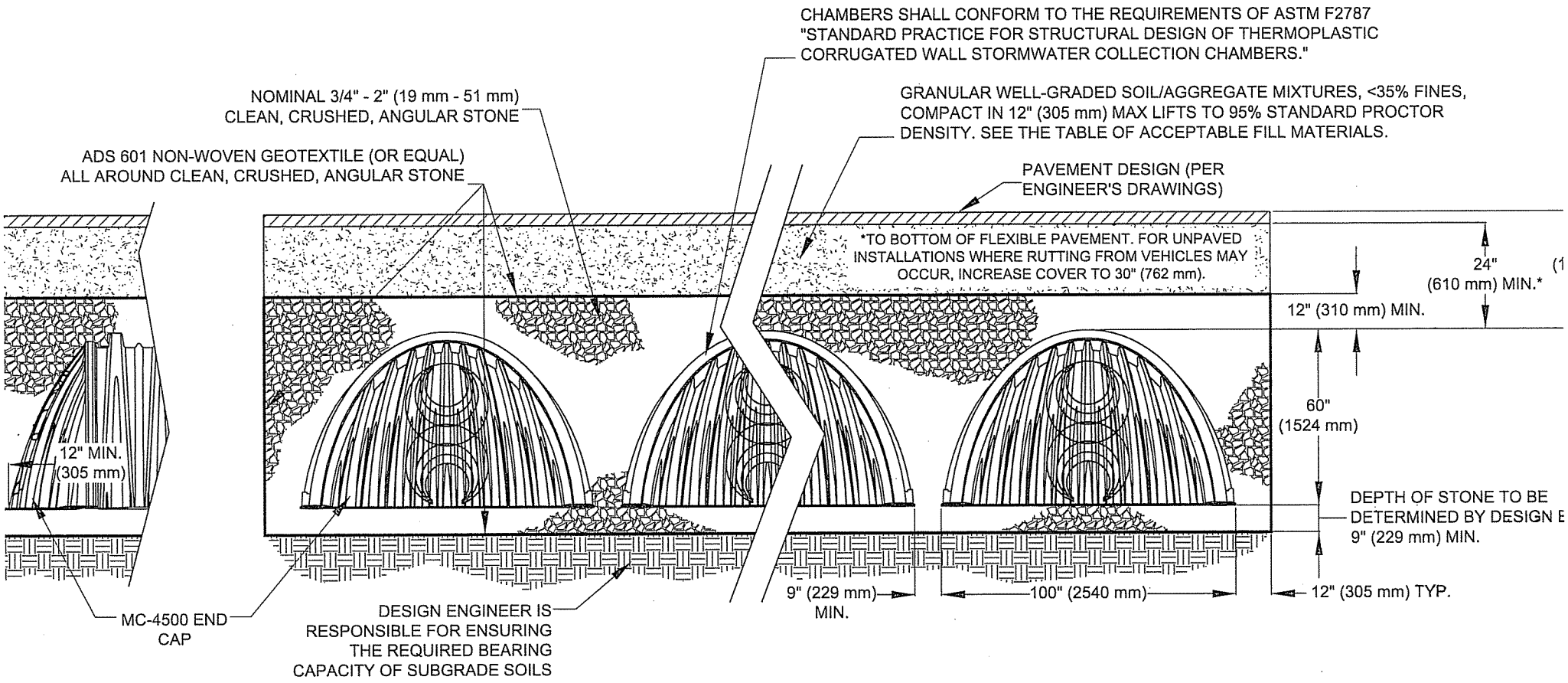


THE INSTALLED CHAMBER SYSTEM SHALL PROVIDE THE LOAD FACTORS SPECIFIED IN THE AASHTO LRFD BRIDGE DESIGN SPECIFICATIONS SECTION 12.12 FOR EARTH AND LIVE LOADS, WITH CONSIDERATION FOR IMPACT AND MULTIPLE VEHICLE PRESENCES.

## STORMTECH MC-4500 CROSS-SECTION

N.T.S.

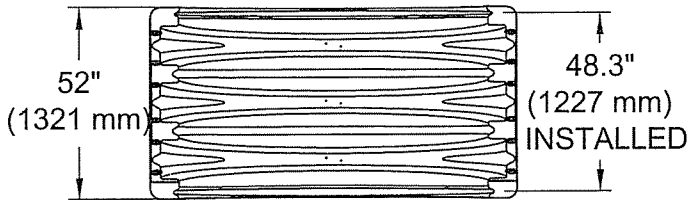


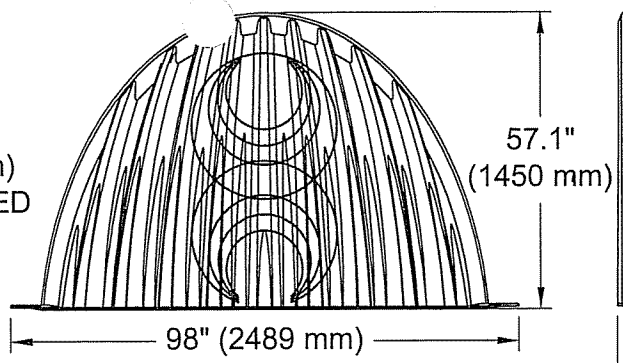


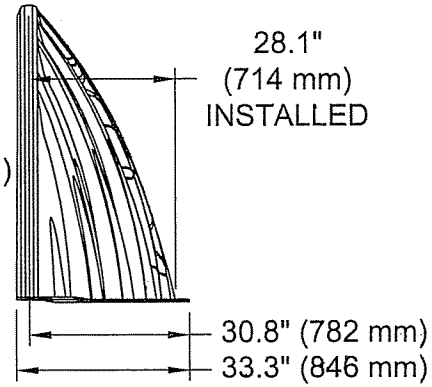


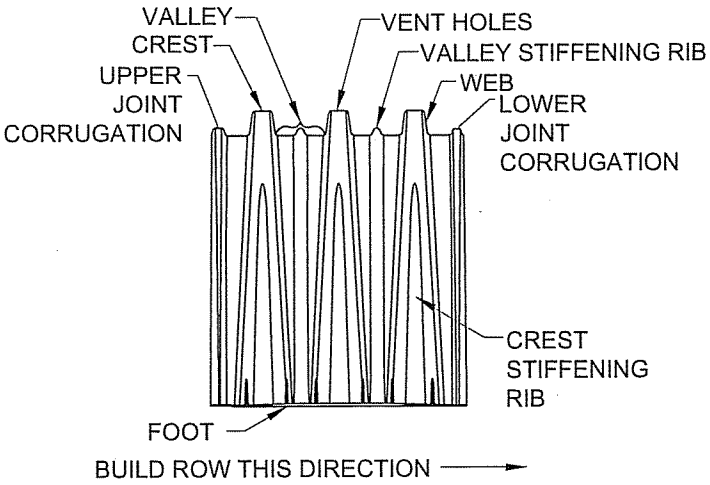


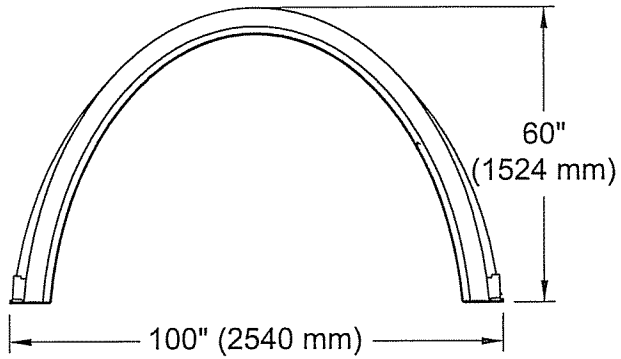


**NOMINAL CHAMBER SPECIFICATIONS**

| | |
|---|---|
| SIZE (W x H x INSTALLED LENGTH) | 100.0" x 60.0" x 48.3" [2540 mm x 1524 mm x 1227 mm] |
| CHAMBER STORAGE | 106.5 ft³ [3.01 m³] |
| MINIMUM INSTALLED STORAGE* | 162.6 ft³ [4.60 m³] |
| NOMINAL WEIGHT | 128 lbs [58 kg] |

**NOMINAL END CAP SPECIFICATIONS**

| | |
|---|---|
| SIZE (W x H x INSTALLED LENGTH) | 98.0" x 57.1" x 28.1" [2489 mm x 1450 mm x 714 mm] |
| END CAP STORAGE | 26.8 ft³ [0.76 m³] |
| MINIMUM INSTALLED STORAGE* | 98.0 ft³ [2.78 m³] |
| NOMINAL WEIGHT | 80 lbs [36 kg] |

# STORMTECH MC-4500 CHAMBER

N.T.S.

**Project:**

StormTech
Detention • Retention • Water Quality
A division of ADS

SUBAREA "SITE 5A" ISOLATOR ROW

| | | |
|---|---|---|
| Chamber Model - | MC-4500 | |
| Units - | Imperial | Click Here for Metric |
| Number of Chambers - | 21 | |
| Number of End Caps - | 2 | |
| Voids in the stone (porosity) - | 40 | % |
| Base of Stone Elevation - | 359.00 | ft |
| Amount of Stone Above Chambers - | 12 | in |
| Amount of Stone Below Chambers - | 9 | in |

Include Perimeter Stone in Calculations

| Height of System (inches) | Incremental Single Chamber (cubic feet) | Incremental Single End Cap (cubic feet) | Incremental Chambers (cubic feet) | Incremental End Cap (cubic feet) | Incremental Stone (cubic feet) | Incremental Ch + C and Stone (cubic feet) | Cumulative System (cubic feet) | Elevation (feet) |
|---|---|---|---|---|---|---|---|---|
| 81 | 0.00 | 0.00 | 0.00 | 0.00 | 31.40 | 31.40 | 4120.09 | 365.75 |
| 80 | 0.00 | 0.00 | 0.00 | 0.00 | 31.40 | 31.40 | 4088.69 | 365.67 |
| 79 | 0.00 | 0.00 | 0.00 | 0.00 | 31.40 | 31.40 | 4057.29 | 365.58 |
| 78 | 0.00 | 0.00 | 0.00 | 0.00 | 31.40 | 31.40 | 4025.89 | 365.50 |
| 77 | 0.00 | 0.00 | 0.00 | 0.00 | 31.40 | 31.40 | 3994.49 | 365.42 |
| 76 | 0.00 | 0.00 | 0.00 | 0.00 | 31.40 | 31.40 | 3963.09 | 365.33 |
| 75 | 0.00 | 0.00 | 0.00 | 0.00 | 31.40 | 31.40 | 3931.68 | 365.25 |
| 74 | 0.00 | 0.00 | 0.00 | 0.00 | 31.40 | 31.40 | 3900.28 | 365.17 |
| 73 | 0.00 | 0.00 | 0.00 | 0.00 | 31.40 | 31.40 | 3868.88 | 365.08 |
| 72 | 0.00 | 0.00 | 0.00 | 0.00 | 31.40 | 31.40 | 3837.48 | 365.00 |
| 71 | 0.00 | 0.00 | 0.00 | 0.00 | 31.40 | 31.40 | 3806.08 | 364.92 |
| 70 | 0.00 | 0.00 | 0.00 | 0.00 | 31.40 | 31.40 | 3774.67 | 364.83 |
| 69 | 0.04 | 0.00 | 0.98 | 0.00 | 31.01 | 31.99 | 3743.27 | 364.75 |
| 68 | 0.12 | 0.01 | 2.79 | 0.02 | 30.28 | 33.09 | 3711.28 | 364.67 |
| 67 | 0.16 | 0.03 | 3.95 | 0.05 | 29.80 | 33.81 | 3678.20 | 364.58 |
| 66 | 0.21 | 0.05 | 5.01 | 0.10 | 29.36 | 34.46 | 3644.39 | 364.50 |
| 65 | 0.27 | 0.07 | 6.44 | 0.14 | 28.77 | 35.35 | 3609.92 | 364.42 |
| 64 | 0.45 | 0.09 | 10.87 | 0.18 | 26.98 | 38.03 | 3574.58 | 364.33 |
| 63 | 0.67 | 0.11 | 15.97 | 0.23 | 24.92 | 41.12 | 3536.55 | 364.25 |
| 62 | 0.80 | 0.14 | 19.18 | 0.28 | 23.62 | 43.08 | 3495.43 | 364.17 |
| 61 | 0.91 | 0.17 | 21.80 | 0.34 | 22.55 | 44.68 | 3452.36 | 364.08 |
| 60 | 1.00 | 0.19 | 24.07 | 0.38 | 21.62 | 46.07 | 3407.68 | 364.00 |
| 59 | 1.09 | 0.22 | 26.10 | 0.43 | 20.79 | 47.32 | 3361.60 | 363.92 |
| 58 | 1.16 | 0.24 | 27.92 | 0.48 | 20.04 | 48.45 | 3314.28 | 363.83 |
| 57 | 1.23 | 0.27 | 29.62 | 0.54 | 19.34 | 49.50 | 3265.84 | 363.75 |
| 56 | 1.30 | 0.30 | 31.19 | 0.60 | 18.69 | 50.47 | 3216.34 | 363.67 |
| 55 | 1.36 | 0.32 | 32.66 | 0.65 | 18.08 | 51.39 | 3165.87 | 363.58 |
| 54 | 1.42 | 0.35 | 34.05 | 0.70 | 17.50 | 52.25 | 3114.48 | 363.50 |
| 53 | 1.47 | 0.37 | 35.36 | 0.74 | 16.96 | 53.06 | 3062.23 | 363.42 |
| 52 | 1.53 | 0.39 | 36.60 | 0.79 | 16.45 | 53.84 | 3009.17 | 363.33 |
| 51 | 1.57 | 0.42 | 37.79 | 0.83 | 15.95 | 54.58 | 2955.33 | 363.25 |
| 50 | 1.62 | 0.44 | 38.91 | 0.88 | 15.48 | 55.28 | 2900.76 | 363.17 |
| 49 | 1.67 | 0.46 | 39.99 | 0.93 | 15.04 | 55.95 | 2845.48 | 363.08 |
| 48 | 1.71 | 0.48 | 41.02 | 0.97 | 14.61 | 56.59 | 2789.53 | 363.00 |
| 47 | 1.75 | 0.50 | 42.00 | 1.01 | 14.20 | 57.21 | 2732.93 | 362.92 |
| 46 | 1.79 | 0.53 | 42.94 | 1.05 | 13.80 | 57.80 | 2675.72 | 362.83 |
| 45 | 1.83 | 0.55 | 43.85 | 1.09 | 13.42 | 58.37 | 2617.93 | 362.75 |
| 44 | 1.86 | 0.56 | 44.72 | 1.13 | 13.06 | 58.91 | 2559.56 | 362.67 |
| 43 | 1.90 | 0.58 | 45.56 | 1.17 | 12.71 | 59.44 | 2500.65 | 362.58 |
| 42 | 1.93 | 0.60 | 46.36 | 1.20 | 12.37 | 59.94 | 2441.21 | 362.50 |
| 41 | 1.96 | 0.62 | 47.14 | 1.24 | 12.05 | 60.43 | 2381.27 | 362.42 |
| 40 | 2.00 | 0.64 | 47.88 | 1.28 | 11.74 | 60.90 | 2320.84 | 362.33 |
| 39 | 2.03 | 0.66 | 48.60 | 1.31 | 11.44 | 61.35 | 2259.94 | 362.25 |
| 38 | 2.05 | 0.67 | 49.29 | 1.35 | 11.15 | 61.78 | 2198.59 | 362.17 |
| 37 | 2.08 | 0.69 | 49.96 | 1.38 | 10.87 | 62.20 | 2136.81 | 362.08 |
| 36 | 2.11 | 0.71 | 50.59 | 1.41 | 10.60 | 62.61 | 2074.60 | 362.00 |
| 35 | 2.13 | 0.72 | 51.21 | 1.45 | 10.34 | 63.00 | 2012.00 | 361.92 |
| 34 | 2.16 | 0.74 | 51.81 | 1.48 | 10.09 | 63.37 | 1949.00 | 361.83 |
| 33 | 2.18 | 0.76 | 52.38 | 1.51 | 9.84 | 63.74 | 1885.62 | 361.75 |
| 32 | 2.21 | 0.77 | 52.93 | 1.54 | 9.61 | 64.09 | 1821.89 | 361.67 |
| 31 | 2.23 | 0.79 | 53.46 | 1.57 | 9.39 | 64.42 | 1757.80 | 361.58 |
| 30 | 2.25 | 0.80 | 53.97 | 1.60 | 9.17 | 64.75 | 1693.37 | 361.50 |
| 29 | 2.27 | 0.82 | 54.46 | 1.64 | 8.96 | 65.07 | 1628.63 | 361.42 |
| 28 | 2.29 | 0.84 | 54.94 | 1.68 | 8.75 | 65.37 | 1563.56 | 361.33 |
| 27 | 2.31 | 0.85 | 55.39 | 1.69 | 8.57 | 65.65 | 1498.19 | 361.25 |
| 26 | 2.33 | 0.86 | 55.82 | 1.72 | 8.39 | 65.93 | 1432.54 | 361.17 |
| 25 | 2.34 | 0.87 | 56.24 | 1.74 | 8.21 | 66.19 | 1366.61 | 361.08 |
| 24 | 2.36 | 0.89 | 56.64 | 1.77 | 8.04 | 66.45 | 1300.42 | 361.00 |
| 23 | 2.38 | 0.90 | 57.02 | 1.80 | 7.88 | 66.69 | 1233.98 | 360.92 |
| 22 | 2.39 | 0.91 | 57.38 | 1.82 | 7.72 | 66.92 | 1167.28 | 360.83 |
| 21 | 2.41 | 0.92 | 57.73 | 1.84 | 7.57 | 67.15 | 1100.36 | 360.75 |
| 20 | 2.42 | 0.93 | 58.06 | 1.87 | 7.43 | 67.36 | 1033.21 | 360.67 |
| 19 | 2.43 | 0.95 | 58.38 | 1.89 | 7.29 | 67.56 | 965.85 | 360.58 |
| 18 | 2.44 | 0.96 | 58.68 | 1.91 | 7.17 | 67.76 | 898.29 | 360.50 |
| 17 | 2.46 | 0.97 | 58.96 | 1.93 | 7.04 | 67.94 | 830.53 | 360.42 |
| 16 | 2.47 | 0.98 | 59.23 | 1.96 | 6.93 | 68.11 | 762.60 | 360.33 |

**Project:**

StormTech
Detention • Retention • Water Quality
A division of ADS

SUBAREA "SITE 5A" DETENTION POND

| | | |
|---|---|---|
| Chamber Model - | MC-4500 | |
| Units - | Imperial | Click Here for Metric |
| Number of Chambers - | 416 | |
| Number of End Caps - | 2 | |
| Voids in the stone (porosity) - | 40 | % |
| Base of Stone Elevation - | 359.00 | ft |
| Amount of Stone Above Chambers - | 12 | in |
| Amount of Stone Below Chambers - | 9 | in |

☐ Include Perimeter Stone in Calculations

| Height of System (inches) | Incremental Single Chamber (cubic feet) | Incremental Single End Cap (cubic feet) | Incremental Chambers (cubic feet) | Incremental End Cap (cubic feet) | Incremental Stone (cubic feet) | Incremental Ch, EC, and Stone (cubic feet) | Cumulative System (cubic feet) | Elevation (feet) |
|---|---|---|---|---|---|---|---|---|
| 81 | 0.00 | 0.00 | 0.00 | 0.00 | 143.52 | 143.52 | 19080.50 | 365.75 |
| 80 | 0.00 | 0.00 | 0.00 | 0.00 | 143.52 | 143.52 | 18936.99 | 365.67 |
| 79 | 0.00 | 0.00 | 0.00 | 0.00 | 143.52 | 143.52 | 18793.47 | 365.58 |
| 78 | 0.00 | 0.00 | 0.00 | 0.00 | 143.52 | 143.52 | 18649.96 | 365.50 |
| 77 | 0.00 | 0.00 | 0.00 | 0.00 | 143.52 | 143.52 | 18506.44 | 365.42 |
| 76 | 0.00 | 0.00 | 0.00 | 0.00 | 143.52 | 143.52 | 18362.92 | 365.33 |
| 75 | 0.00 | 0.00 | 0.00 | 0.00 | 143.52 | 143.52 | 18219.41 | 365.25 |
| 74 | 0.00 | 0.00 | 0.00 | 0.00 | 143.52 | 143.52 | 18075.89 | 365.17 |
| 73 | 0.00 | 0.00 | 0.00 | 0.00 | 143.52 | 143.52 | 17932.38 | 365.08 |
| 72 | 0.00 | 0.00 | 0.00 | 0.00 | 143.52 | 143.52 | 17788.86 | 365.00 |
| 71 | 0.00 | 0.00 | 0.00 | 0.00 | 143.52 | 143.52 | 17645.34 | 364.92 |
| 70 | 0.00 | 0.00 | 0.00 | 0.00 | 143.52 | 143.52 | 17501.83 | 364.83 |
| 69 | 0.04 | 0.00 | 4.75 | 0.00 | 141.62 | 146.37 | 17358.31 | 364.75 |
| 68 | 0.12 | 0.01 | 13.47 | 0.02 | 138.12 | 151.61 | 17211.95 | 364.67 |
| 67 | 0.16 | 0.03 | 19.11 | 0.05 | 135.85 | 155.01 | 17060.34 | 364.58 |
| 66 | 0.21 | 0.05 | 24.21 | 0.10 | 133.79 | 158.10 | 16905.32 | 364.50 |
| 65 | 0.27 | 0.07 | 31.13 | 0.14 | 131.01 | 162.27 | 16747.22 | 364.42 |
| 64 | 0.45 | 0.09 | 52.52 | 0.18 | 122.44 | 175.14 | 16584.95 | 364.33 |
| 63 | 0.67 | 0.11 | 77.17 | 0.23 | 112.56 | 189.95 | 16409.81 | 364.25 |
| 62 | 0.80 | 0.14 | 92.69 | 0.28 | 106.33 | 199.30 | 16219.86 | 364.17 |
| 61 | 0.91 | 0.17 | 105.34 | 0.34 | 101.24 | 206.92 | 16020.56 | 364.08 |
| 60 | 1.00 | 0.19 | 116.34 | 0.38 | 96.83 | 213.55 | 15813.64 | 364.00 |
| 59 | 1.09 | 0.22 | 126.13 | 0.43 | 92.89 | 219.45 | 15600.09 | 363.92 |
| 58 | 1.16 | 0.24 | 134.96 | 0.48 | 89.34 | 224.78 | 15380.64 | 363.83 |
| 57 | 1.23 | 0.27 | 143.15 | 0.54 | 86.04 | 229.73 | 15155.86 | 363.75 |
| 56 | 1.30 | 0.30 | 150.76 | 0.60 | 82.97 | 234.33 | 14926.13 | 363.67 |
| 55 | 1.36 | 0.32 | 157.88 | 0.65 | 80.11 | 238.63 | 14691.80 | 363.58 |
| 54 | 1.42 | 0.35 | 164.57 | 0.70 | 77.41 | 242.68 | 14453.17 | 363.50 |
| 53 | 1.47 | 0.37 | 170.91 | 0.74 | 74.86 | 246.50 | 14210.49 | 363.42 |
| 52 | 1.53 | 0.39 | 176.92 | 0.79 | 72.43 | 250.14 | 13963.99 | 363.33 |
| 51 | 1.57 | 0.42 | 182.64 | 0.83 | 70.13 | 253.60 | 13713.85 | 363.25 |
| 50 | 1.62 | 0.44 | 188.08 | 0.88 | 67.93 | 256.89 | 13460.25 | 363.17 |
| 49 | 1.67 | 0.46 | 193.28 | 0.93 | 65.83 | 260.04 | 13203.35 | 363.08 |
| 48 | 1.71 | 0.48 | 198.26 | 0.97 | 63.83 | 263.05 | 12943.31 | 363.00 |
| 47 | 1.75 | 0.50 | 203.01 | 1.01 | 61.91 | 265.93 | 12680.26 | 362.92 |
| 46 | 1.79 | 0.53 | 207.56 | 1.05 | 60.07 | 268.68 | 12414.33 | 362.83 |
| 45 | 1.83 | 0.55 | 211.95 | 1.09 | 58.30 | 271.34 | 12145.65 | 362.75 |
| 44 | 1.86 | 0.56 | 216.16 | 1.13 | 56.60 | 273.89 | 11874.31 | 362.67 |
| 43 | 1.90 | 0.58 | 220.21 | 1.17 | 54.97 | 276.34 | 11600.42 | 362.58 |
| 42 | 1.93 | 0.60 | 224.09 | 1.20 | 53.40 | 278.69 | 11324.08 | 362.50 |
| 41 | 1.96 | 0.62 | 227.83 | 1.24 | 51.89 | 280.96 | 11045.39 | 362.42 |
| 40 | 2.00 | 0.64 | 231.43 | 1.28 | 50.43 | 283.14 | 10764.43 | 362.33 |
| 39 | 2.03 | 0.66 | 234.90 | 1.31 | 49.03 | 285.24 | 10481.29 | 362.25 |
| 38 | 2.05 | 0.67 | 238.24 | 1.35 | 47.68 | 287.27 | 10196.04 | 362.17 |
| 37 | 2.08 | 0.69 | 241.45 | 1.38 | 46.38 | 289.22 | 9908.77 | 362.08 |
| 36 | 2.11 | 0.71 | 244.54 | 1.41 | 45.14 | 291.09 | 9619.56 | 362.00 |
| 35 | 2.13 | 0.72 | 247.53 | 1.45 | 43.93 | 292.90 | 9328.47 | 361.92 |
| 34 | 2.16 | 0.74 | 250.41 | 1.48 | 42.76 | 294.65 | 9035.57 | 361.83 |
| 33 | 2.18 | 0.76 | 253.17 | 1.51 | 41.64 | 296.33 | 8740.92 | 361.75 |
| 32 | 2.21 | 0.77 | 255.84 | 1.54 | 40.56 | 297.95 | 8444.59 | 361.67 |
| 31 | 2.23 | 0.79 | 258.41 | 1.57 | 39.52 | 299.50 | 8146.65 | 361.58 |
| 30 | 2.25 | 0.80 | 260.87 | 1.60 | 38.53 | 301.00 | 7847.14 | 361.50 |
| 29 | 2.27 | 0.82 | 263.24 | 1.64 | 37.56 | 302.45 | 7546.14 | 361.42 |
| 28 | 2.29 | 0.84 | 265.52 | 1.68 | 36.63 | 303.84 | 7243.70 | 361.33 |
| 27 | 2.31 | 0.85 | 267.71 | 1.69 | 35.75 | 305.16 | 6939.86 | 361.25 |
| 26 | 2.33 | 0.86 | 269.81 | 1.72 | 34.91 | 306.43 | 6634.70 | 361.17 |
| 25 | 2.34 | 0.87 | 271.82 | 1.74 | 34.09 | 307.66 | 6328.27 | 361.08 |
| 24 | 2.36 | 0.89 | 273.75 | 1.77 | 33.31 | 308.83 | 6020.61 | 361.00 |
| 23 | 2.38 | 0.90 | 275.59 | 1.80 | 32.56 | 309.95 | 5711.78 | 360.92 |
| 22 | 2.39 | 0.91 | 277.35 | 1.82 | 31.85 | 311.02 | 5401.84 | 360.83 |
| 21 | 2.41 | 0.92 | 279.03 | 1.84 | 31.16 | 312.04 | 5090.82 | 360.75 |
| 20 | 2.42 | 0.93 | 280.63 | 1.87 | 30.51 | 313.02 | 4778.77 | 360.67 |
| 19 | 2.43 | 0.95 | 282.16 | 1.89 | 29.90 | 313.94 | 4465.75 | 360.58 |
| 18 | 2.44 | 0.96 | 283.60 | 1.91 | 29.31 | 314.82 | 4151.81 | 360.50 |
| 17 | 2.46 | 0.97 | 284.97 | 1.93 | 28.75 | 315.66 | 3836.99 | 360.42 |
| 16 | 2.47 | 0.98 | 286.26 | 1.96 | 28.23 | 316.45 | 3521.33 | 360.33 |

Oak Tree
SY-1385
6-Feb-20

***VOLUME OF SC-3500 SYSTEM (ISOLATOR UNITS) FOR:*** ***Site-5A***

| STAGE (elev. In ft.) | VOLUME PER UNIT (cubic feet) | VOLUME SYSTEM (ac-ft) |
|---|---|---|
| 359.08 | 0.00 | 0.0000 |
| 359.75 | 282.62 | 0.0065 |
| 360.75 | 1100.36 | 0.0253 |
| 361.75 | 1885.62 | 0.0433 |
| 362.75 | 2617.93 | 0.0601 |
| 363.75 | 3265.84 | 0.0750 |
| 364.75 | 3743.27 | 0.0859 |
| 365.75 | 4120.09 | 0.0946 |

***VOLUME OF SC-3500 SYSTEM (DETENTION UNITS) FOR:*** ***Site-5A***

| STAGE (elev. In ft.) | VOLUME PER UNIT (cubic feet) | VOLUME SYSTEM (ac-ft) |
|---|---|---|
| 359.08 | 0.00 | 0.0000 |
| 359.75 | 1291.64 | 0.0297 |
| 360.75 | 5090.82 | 0.1169 |
| 361.75 | 8740.92 | 0.2007 |
| 362.75 | 12145.65 | 0.2788 |
| 363.75 | 15155.86 | 0.3479 |
| 364.75 | 17358.31 | 0.3985 |
| 365.75 | 19080.50 | 0.4380 |

***COMBINED VOLUME OF SC-3500 SYSTEM FOR:*** ***Site-5A***

| STAGE (elev. In ft.) | VOLUME PER UNIT (cubic feet) | VOLUME SYSTEM (ac-ft) |
|---|---|---|
| 359.08 | 0.00 | 0.0000 |
| 359.75 | 1574.26 | 0.0361 |
| 360.75 | 6191.18 | 0.1421 |
| 361.75 | 10626.55 | 0.2440 |
| 362.75 | 14763.58 | 0.3389 |
| 363.75 | 18421.70 | 0.4229 |
| 364.75 | 21101.59 | 0.4844 |
| 365.75 | 23200.60 | 0.5326 |

## ***SEEPAGE BASIN DATA:***

**1) Chamber:** 4.03 Ft. Long
8.17 Ft. Wide
140 = required number of chambers

**Chamber End Cap base area:** 15.6 sf
8 = required number of end caps

Area chambers: 4609.514 sf

Area end caps: 124.8 sf

Total Area for Percolation: **4734.314** sf

**2) Storage:**

Inside Area of Basin = $\pi r^2$ = $\pi (D/2)^2$

= 12.76 $ft^2$

= 0.00029 ac

= 0.0410 ac (for 140 LB)

**3) Outflow:**

*Stage 0.1 Only*

Seepage Area (A) = Exterior Area of Base

Stages 1-8

Seepage Area (A) = Sum ( Previous Seepage Area)

Percolation Rate (V) = 1 inch per 14 Minutes

= 0.000099 ft/sec

Outflow Rate (Q) = Seepage Area (A) x Percolation Rate (V)

*Basin Outflow:*

**SEEPAGE BASIN STAGE VS. OUTFLOW**

| Stage | Elev | Seepage Area ($ft^2$) | Percolation Rate (feet/sec) | Outflow Rate (cfs) |
|---|---|---|---|---|
| 0.1 | 359.08 | 4,734.3 | 0.000099 | 0.46967 |
| 1 | 360.08 | 4,734.3 | 0.000099 | 0.46967 |
| 2 | 361.08 | 4,734.3 | 0.000099 | 0.46967 |
| 3 | 362.08 | 4,734.3 | 0.000099 | 0.46967 |
| 4 | 363.08 | 4,734.3 | 0.000099 | 0.46967 |
| 5 | 364.08 | 4,734.3 | 0.000099 | 0.46967 |

***SPARACO AND YOUNGBLOOD, PLLC***
P.O. Box #818, 18 North Main Street
Harriman, NY 10926
845-782-8543

# Summary Table #WQ-1:Water Quality Volume Calculations

Project: **Oak Tree**
Location: **Haverstraw, NY**
JOB # SY-1385

By: SMS
Rev. Date: 6-Feb-20

## *Water Quality Calculations*

*NYSDEC Required Storage Volume:*

Sub-Area: *Site-5A*

Data:

| | | |
|---|---|---|
| P: | 1.3 | = 90% Rainfall Event Number from Figure #1 |
| Rv: | 0.77468 | = 0.05 + 0.009(I) (Min. Rv =0.2) Use Rv = 0.77468 |
| I: | 80.52 | = Impervious coverage percentage |
| A: | 4.26 | = Site Area to Basin (in acres) |

WQv: **0.358** = Req'd Water Quality Volume (in ac-ft)

$$= \frac{(P)(Rv)(A)}{12}$$

Pre Treatment required (20% if percolation rate less than 2-inches per hour and 100% if less than 2-inches per hour):

Percolation Rate: 14 minutes for 1 inch drop.
Volume percentage required: 20 percent

| | |
|---|---|
| Pre-treatment volume: | **0.072** ac-ft |
| Pre-treatment vol. provided: | **0.095** ac-ft |

ok

## ***Set required WQv Elev:***

| | | Elev. (ft.) | Cumulative Volume |
|---|---|---|---|
| Infiltration System Invert Elevation ($I_{EL}$) = | | 82.5 | (ac-ft) |
| Water Quality Storage Elevation Range: | High: | 364.75 | 0.3985 |
| | Low: | 359.00 | 0.0000 |
| | | Diff. = | 0.3985 |

Minimum WQ Volume required above permanent pool = **0.3575** ac-ft

Interpolated Volume Change = ( Higher Cumulative Volume - Req'd WQ Volume over Perm. Pool)/Diff. In Volume in Range

Interpolated Volume Change = ( 0.3985 - 0.3575 )/ 0.3985

Interpolated Volume Ratio = 0.1028

Interpolated Elevation Change = 364.75 - ( 0.1028 x 5.75 )

Interpolated Elevation Change = 364.16 ft.

Minimum Water Quality Volume High Elevation = 364.16 ft.

Set Water Quality Volume Elevation = 364.20 ft.

**Note: Total Storage at elevation: 364.20 is 0.3604 ac-ft, which is greater than req. 0.3575 ac-ft.* ok

***SPARACO AND YOUNGBLOOD, PLLC***
P.O. Box #818, 18 North Main Street
Harriman, NY 10926
845-782-8543

## Summary Table #WQ-2:Runoff Reduction Volume Calculations

Project: **Oak Tree**
Location: **Haverstraw, NY**
JOB # SY-1385

By: SMS
Rev. Date: 6-Feb-20

***Runoff Reduction Volume Calculations***

*NYSDEC Required Runoff Reduction Volume for :* Sub-Area: *Site-5A*

Data: Entire Subarea

| | | |
|---|---|---|
| P: | 1.3 | = 90% Rainfall Event Number from Figure #1 |
| Rv: | 0.950 | = 0.05 + 0.009(I) (I=100 percent) |
| Aic: | 3.43 | = Impervious cover targeted for runoff reduction (in acres) |
| Ai: | 1.029 | = (S)(Aic) (in acres) |
| S: | 0.3 | = Hydrologic Soil Group (HSG) Specific Reduction Factor |

HSG Type "A" = 0.55
HSG Type "B" = 0.4
HSG Type "C" = 0.3
HSG Type "D" = 0.2

$RR_{V1}$: **0.106** = Req'd Runoff Reduction Volume (in ac-ft)
$= \frac{(P)(Rv)(Ai)}{12}$

Provided Volume in Stormceptor Chamber system: **0.360 ac-ft** *up to WQv Elevation.* **ok, greater than required $RR_{V1}$:**

***Note: Current NYSDEC regulations allow RRv for 100% of WQv when using infiltration practices.**

*Total Available Volume in Stormceptor system:* *0.438 ac-ft*

***SPARACO AND YOUNGBLOOD, PLLC***
P.O. Box #818, 18 North Main Street
Harriman, NY 10926
845-782-8543

## Channel Protection Storage Volume ($Cp_V$): Calculation:

Project: **Oak Tree** By: SMS
Location: **Haverstraw, NY** Date: 6-Feb-20

Data:

Water Quality Orifice Invert. . . . . = 82.50 ft.
Water Quality Storage Elevation. . . . . = 364.20 ft.

| | | | Sub-basin: | Site-5A | | |
|---|---|---|---|---|---|---|
| 1. | Unit Peak Discharge, $q_u$. . . . . = | (csm/in.) | | 650 | | |
| | Duration Time, T.....T = | (hr .) | | 24 | | |
| | Runoff, Q . . . . . = | (in.) | | 1.78 | | |
| | Drainage Area.....Am = | ($mi^2$ ) | | 0.0067 | | |
| | Drainage Area (in acres) = $A_m$ x 640 = A = | (acres) | | 4.26 | | |
| 2. | Find ($q_o/q_i$) from Figure 8.5. . . . . | | | 0.03 | | |
| | ($q_o/q_i$ = Peak outflow/Peak Inflow discharge) | | | | | |
| 3. | Calculate $V_s/V_r$ | | | 0.642 | | |
| | [$V_s/V_r = 0.683-1.43(q_o/q_i) + 1.64 (q_o/q_i)^2 -0.804 (q_o/q_i)^3$] | | | | | |
| | | | | | Total $V_s$ | |
| 4. | Solve for $V_s$ | (ac-ft) | | 0.4053 | **0.4053** | (ac-ft) |
| | [$V_s=Cp_v = (V_s/V_r)$ x Q x A/12] | (cubic ft.) | | 17,653 | 17653 | (cubic ft.) |
| 5. | Compute Average Release Rate = $Q_{AVG}$ | | | 0.20 | (cfs) | |
| | [$Q_{AVG} = V_s$ /T*3600 sec/hr] | | | | | |

## *Calculate Required Channel Protection Volume Elevation (Cp $_V$ E):*

| | | Elev. (ft.) | Cumulative Volume (ac-ft) | Actual WQ ume Reser (ac-ft) | Net Volume (ac-ft) |
|---|---|---|---|---|---|
| Water Quality Volume Elevation ($WQ_{vE}$) = | | 364.20 | | | |
| Channel Protection Storage Elevation Range: | High: | 364.75 | 0.4380 | 0.0000 | 0.4380 |
| | Low: | 359.00 | 0.0000 | 0.0000 | 0.0000 |
| | Diff. = | | 0.4380 | 0.0000 | 0.4380 |

Min. Channel Protection Volume required = 0.4053 ac-ft

Interpolated Volume Change = ( Higher Net Volume - Req'd Cp Volume over WQv)/Diff. In Volume in Range

Interpolated Volume Ratio = ( 0.4380 - 0.4053 )/ 0.4380

Interpolated Volume Ratio = 0.0748

Interpolated Elevation Change = 364.75 - ( 0.0748 x 5.75 )

Interpolated Elevation Change = 364.32 ft.

Minimum Channel Protection Volume High Elevation = 364.32 ft.

| Set Channel Protection Volume Elevation = 364.40 ft. |
|---|

| *Note: Total Storage at elevation: 364.40 is 0.4114 ac-ft, which is greater thai 0.4053 ac-ft. |
|---|

## *Compute the required Cp $_V$-ED orifice:*

Required Cpv = 0.4053 ac-ft.

Average ED release rate = 0.4053 x 43560 ft$^2$/ac / (24 hr x 3600 sec/hr)

Average ED release rate = 0.20 cfs

*Size Cpv-ED orifice to release average of : 0.20 - 0.00 cfs

| Qavg = **0.20** cfs |
|---|

Average Cpv-ED orifice rate is:

Average head (h) = ($WQ_{VE}$ - $WQ_{PPE}$)/2

$$\text{Average h} = \frac{364.40 - 364.20}{2}$$

| Average h = 0.10 ft. |
|---|

***Use the orifice flow equation to calculate the required cross-sectional area and diameter for the Cp $_V$-ED orifice:*

[Q=ca(sq. rt. (2gh))]

where:

c = 0.61

g = 32.2

Average h = 0.10

sqrt(2gh) = 2.538

a= 0.132 sq. ft. ased upon: [a=Q/c (sq. rt. (2gh))]

Calculate diameter of pipe based upon area = D = 0.410 ft. ased upon: [D = sq. rt. (4a/3.15159)]

D = 4.919 in.

| For Design, Use a **4.50** in. dia. hole. |
|---|

(1" dia. is minimum as per NYSDEC)

Orifice centerline elevation = Orifice invert + (Orifice size in feet/2)

Orifice centerline elevation = 364.20 + 0.19

| Orifice centerline elevation = 364.39 ft. |
|---|

## *SPARACO & YOUNGBLOOD, PLLC*

Project: **Oak Tree**
Location: **Town of Haverstraw, NY**
JOB # SY-1385

By: SMS
Date: 6-Feb-20
Sub-Area: Site-5A

## Outlet Structure - Elevation vs. Discharge Calculations

Known Data:

***Orifice #1:***

| | | |
|---|---|---|
| Orifice Dia.: | 4.50 | in. |
| Invert El.: | 364.20 | ft. |
| Centerline El.: | 364.39 | ft. |
| A= | 0.110 | $ft^2$ |

***Orifice #2:***

| | | |
|---|---|---|
| Orifice Dia.: | 0.00 | in. |
| Invert El.: | 364.40 | ft. |
| Centerline El.: | 364.40 | ft. |
| A= | 0.000 | $ft^2$ |

***Orifice #3:***

| | | |
|---|---|---|
| Orifice Dia.: | 0.00 | in. |
| Invert El.: | 364.40 | ft. |
| Centerline El.: | 364.40 | ft. |
| A= | 0.000 | $ft^2$ |

***Spillway #1 (Weir):***

| | | |
|---|---|---|
| Spillway Inv. Elev.: | 366.3 | ft. |
| Spillway Top Elev.: | n/a | ft. |
| Spillway Length: | 4.71 | ft. |

***Spillway #2 (Top Struct.):***

| | | |
|---|---|---|
| Spillway Inv. Elev.: | 368.0 | ft. |
| Spillway Top Elev.: | n/a | ft. |
| Spillway Length: | 5.00 | ft. |

In Orifice Flow Eq. ;
Q=cA[sq. rt. (2gH)]

| | | |
|---|---|---|
| c= | 0.61 | (orifice #1) |
| c= | 0.61 | (orifice #2) |
| c= | 0.61 | (orifice #3) |
| c= | 0.61 | (orifice #4) |
| c= | 0.61 | (orifice #5) |
| g= | 32.2 | |
| H= | (See Below) | |

| | | |
|---|---|---|
| c= | 0.61 | (orifice #6) |
| c= | 0.61 | (orifice #7) |
| c= | 0.61 | (orifice #8) |
| c= | 0.61 | (orifice #9) |

In Weir Flow Eq. ;
Q=cLH**3/2

| | | | | |
|---|---|---|---|---|
| c= | 3.0 | | | |
| use L= | 4.7 | > than el. | 366.30 | ft. |
| $H_4$= | (See Below) | | | |

$H_1$= Height over orifice centerline
$H_2$= Height over orifice #2 centerline
$H_3$= Height over orifice #3 centerline
$H_4$= Height over orifice #4 invert
$H_{10}$= Height over spillway #1 elevation
$H_{11}$= Height over spillway #2 elevation

** c=0.61 for square-edged orifice*
*** c=0.98 for orifice with well-rounded entry*
*(Oct., 1959 Seelye Data Book for Civil Engineers)*

## Elevation vs. Discharge

| Elev. (ft.) | Orifice Flows to Orifice #1 $H_1$ (ft.) | Flow (cfs) | Orifice Flows to Orifice #2 $H_2$ (ft.) | Flow (cfs) | Orifice Flows to Orifice #3 $H_3$ (ft.) | One Pipe Flow (cfs) | Orifice Flows to Orifice #4 $H_5$ (ft.) | Flow (cfs) | Weir Flows over Spillway #1 $H_{10}$ (ft.) | Flow (cfs) | Weir Flows over Spillway #2 $H_{11}$ (ft.) | Flow (cfs) | Totals Cumulative Flow (cfs) |
|---|---|---|---|---|---|---|---|---|---|---|---|---|---|
| **364.20** | 0.0 | 0.00 | | | | | | | | | | | **0.00** |
| 364.40 | 0.0 | 0.00 | | | | | | | | | | | 0.00 |
| **364.60** | 0.2 | 0.25 | | | | | | | | | | | **0.25** |
| 364.80 | 0.4 | 0.35 | | | | | | | | | | | 0.35 |
| 365.00 | 0.6 | 0.42 | | | | | | | | | | | 0.42 |
| 365.20 | 0.8 | 0.49 | | | | | | | | | | | 0.49 |
| 365.40 | 1.0 | 0.54 | | | | | | | | | | | 0.54 |
| 365.60 | 1.2 | 0.60 | | | | | | | | | | | 0.60 |
| 365.80 | 1.4 | 0.64 | | | | | | | | | | | 0.64 |
| 366.00 | 1.6 | 0.69 | | | | | | | | | | | 0.69 |
| **366.20** | 1.8 | 0.73 | | | | | | | | | | | **0.73** |
| **366.40** | 2.0 | 0.77 | | | | | | | 0.1 | 0.45 | | | **1.21** |
| **366.60** | 2.2 | 0.80 | | | | | | | 0.3 | 2.32 | | | **3.13** |
| **366.80** | 2.4 | 0.84 | | | | | | | 0.5 | 5.00 | | | **5.84** |
| **367.00** | 2.6 | 0.87 | | | | | | | 0.7 | 8.28 | | | **9.15** |
| **367.20** | 2.8 | 0.91 | | | | | | | 0.9 | 12.06 | | | **12.97** |
| 367.40 | 3.0 | 0.94 | | | | | | | 1.1 | 16.30 | | | 17.24 |
| **367.60** | 3.2 | 0.97 | | | | | | | 1.3 | 20.94 | | | **21.91** |
| 367.80 | 3.4 | 1.00 | | | | | | | 1.5 | 25.96 | | | 26.96 |
| 368.00 | 3.6 | 1.03 | | | | | | | 1.7 | 31.32 | | | 32.35 |
| **368.20** | 3.8 | 1.06 | | | | | | | 1.9 | 37.01 | | | **38.06** |
| 368.40 | 4.0 | 1.08 | | | | | | | 2.1 | 43.00 | | | 44.08 |
| 368.60 | 4.2 | 1.11 | | | | | | | 2.3 | 49.29 | | | 50.40 |
| 368.80 | 4.4 | 1.14 | | | | | | | 2.5 | 55.85 | | | 56.99 |
| 369.00 | 4.6 | 1.16 | | | | | | | 2.7 | 62.69 | | | 63.85 |
| 369.20 | 4.8 | 1.19 | | | | | | | 2.9 | 69.78 | | | 70.97 |
| 369.40 | 5.0 | 1.21 | | | | | | | 3.1 | 77.12 | | | 78.33 |
| 369.60 | 5.2 | 1.23 | | | | | | | 3.3 | 84.71 | | | 85.94 |
| 369.80 | 5.4 | 1.26 | | | | | | | 3.5 | 92.52 | | | 93.78 |
| 370.00 | 5.6 | 1.28 | | | | | | | 3.7 | 100.56 | | | 101.85 |
| 370.20 | 5.8 | 1.30 | | | | | | | 3.9 | 108.83 | | | 110.13 |
| 370.40 | 6.0 | 1.33 | | | | | | | 4.1 | 117.31 | | | 118.63 |
| 370.60 | 6.2 | 1.35 | | | | | | | 4.3 | 125.99 | | | 127.34 |
| 370.80 | 6.4 | 1.37 | | | | | | | 4.5 | 134.88 | | | 136.25 |
| 371.00 | 6.6 | 1.39 | | | | | | | 4.7 | 143.98 | | | 145.37 |
| 371.20 | 6.8 | 1.41 | | | | | | | 4.9 | 153.26 | | | 154.67 |
| 371.40 | 7.0 | 1.43 | | | | | | | 5.1 | 162.74 | | | 164.17 |
| 371.60 | 7.2 | 1.45 | | | | | | | 5.3 | 172.41 | | | 173.86 |
| 371.80 | 7.4 | 1.47 | | | | | | | 5.5 | 182.26 | | | 183.73 |
| 372.00 | 7.6 | 1.49 | | | | | | | 5.7 | 192.29 | | | 193.78 |
| 372.20 | 7.8 | 1.51 | | | | | | | 5.9 | 202.50 | | | 204.01 |
| 372.40 | 8.0 | 1.53 | | | | | | | 6.1 | 212.88 | | | 214.41 |
| 372.60 | 8.2 | 1.55 | | | | | | | 6.3 | 223.44 | | | 224.99 |
| 372.80 | 8.4 | 1.57 | | | | | | | 6.5 | 234.16 | | | 235.73 |
| 373.00 | 8.6 | 1.59 | | | | 0.00 | | | 6.7 | 245.05 | | | 246.64 |

| Elev. Flow (cfs) | Orifice #1 Flow (cfs) | Orifice #2 Flow (cfs) | Orifice #3 Flow (cfs) | Weir #1 Flow (cfs) | Weir #2 Flow (cfs) | Total Flow (cfs) |
|---|---|---|---|---|---|---|

*Hec-1 Analyses:*

*1.) Existing Conditions Hec-1 Model*
*2.) Developed Conditions Hec-1 Model*

```
1*****************************************
*                                       *
*   FLOOD HYDROGRAPH PACKAGE  (HEC-1)   *
*             MAY   1991                *
*          VERSION 4.0.1U               *
*     Lahey F77L-EM/32 version 5.01     *
*       Dodson & Associates, Inc.       *
*  RUN DATE  09/17/19  TIME  15:41:00   *
*****************************************
```

```
*****************************************
*                                       *
*    U.S. ARMY CORPS OF ENGINEERS       *
*    HYDROLOGIC ENGINEERING CENTER      *
*          609 SECOND STREET            *
*        DAVIS, CALIFORNIA 95616        *
*           (916) 551-1748              *
*                                       *
*****************************************
```

# OAK TREE DEVELOPMENT #SY-1385: EXISTING CONDITIONS HEC-1 ANALYSIS

```
X     X  XXXXXXX   XXXXX          X
X     X  X        X     X        XX
X     X  X        X              X
XXXXXXX  XXXX     X        XXXXX  X
X     X  X        X              X
X     X  X        X     X        X
X     X  XXXXXXX   XXXXX         XXX
```

THIS PROGRAM REPLACES ALL PREVIOUS VERSIONS OF HEC-1 KNOWN AS HEC1 (JAN 73), HEC1GS, HEC1DB, AND HEC1KW.

THE DEFINITIONS OF VARIABLES -RTIMP- AND -RTIOR- HAVE CHANGED FROM THOSE USED WITH THE 1973-STYLE INPUT STRUCTURE.
THE DEFINITION OF -AMSKK- ON RM-CARD WAS CHANGED WITH REVISIONS DATED 28 SEP 81. THIS IS THE FORTRAN77 VERSION
NEW OPTIONS: DAMBREAK OUTFLOW SUBMERGENCE , SINGLE EVENT DAMAGE CALCULATION, DSS:WRITE STAGE FREQUENCY,
DSS:READ TIME SERIES AT DESIRED CALCULATION INTERVAL  LOSS RATE:GREEN AND AMPT INFILTRATION
KINEMATIC WAVE: NEW FINITE DIFFERENCE ALGORITHM

1 HEC-1 INPUT PAGE 1

```
LINE          ID.......1.......2.......3.......4.......5.......6.......7.......8.......9......10

   1          ID                    ~~~~~~~~~~~~input file:EX-R.ih1~~~~~~~~~~~~~
   2          ID
   3          ID       HYDROLOGY FOR: OAK TREE(SY #1385)
   4          ID                      TOWN OF HAVERSTRAW, ROCKLAND COUNTY, NEW YORK
   5          ID                      DATE: 9-17-19
   6          ID
   7          ID       ANALYSIS PREPARED BY: SPARACO & YOUNGBLOOD, PLLC
   8          ID
   9          ID  ANALYSIS PARAMETERS:
  10          ID  EXISTING CONDITIONS RUN
  11          ID  STORM RECURRENCE INTERVALS = 1, 2, 5, 10, 25 & 100 YEAR
  12          ID  HYDROGRAPH METHOD:           SCS
  13          ID  RAINFALL DISTRIBUTION:       SCS TYPE III
  14          ID
  15          ID  24 HOUR RAINFALL DATA:
  16          ID  1 YEAR: 2.8 INCHES
  17          ID  2 YEAR: 3.5 INCHES
  18          ID  5 YEAR: 4.5 INCHES
  19          ID  10 YEAR: 5.1 INCHES
  20          ID  25 YEAR: 6.0 INCHES
  21          ID  100 YEAR: 9.0 INCHES
  22          ID
  23          ID
              *DIAGRAM
  24          IT       6       0       0     300
  25          IO       3       0
  26          JR    PREC     2.8     3.5     4.5     5.1       6       9

  27          KK  SITE-1NORTHWESTERLY SITE RUNOFF TOWARD PT.1
  28          KM
  29          KM  ************************************************************************
  30          KM  * DRAINAGE AREA = 4.14 AC = 0.0065 SQ. MI.      CN=78                 *
  31          KM  * TIME OF CONCENTRATION = 10 MIN = 0.167 HR x 0.6 (SCS LAG) = 0.100   *
  32          KM  ************************************************************************
  33          KM
  34          BA  0.0065
  35          PB       1
  36          IN       6
  37          PC       0   0.001   0.002   0.003   0.004   0.005   0.006   0.007   0.008   0.009
  38          PC   0.010   0.011   0.012   0.013   0.014   0.015   0.016   0.017   0.018   0.019
  39          PC   0.020   0.021   0.022   0.023   0.024   0.026   0.027   0.028   0.029   0.030
  40          PC  0.0305   0.031   0.032   0.034   0.035   0.036   0.037   0.038   0.040   0.041
  41          PC   0.042   0.043   0.045   0.046   0.047   0.049   0.050   0.051   0.053   0.054
  42          PC   0.055   0.057   0.058   0.060   0.061   0.063   0.064   0.066   0.067   0.069
  43          PC   0.070   0.072   0.074   0.075   0.077   0.079   0.080   0.082   0.084   0.085
  44          PC   0.087   0.089   0.091   0.093   0.095   0.097   0.100   0.103   0.106   0.109
  45          PC   0.112   0.115   0.118   0.121   0.124   0.127   0.130   0.134   0.137   0.140
  46          PC   0.144   0.148   0.151   0.155   0.159   0.163   0.167   0.171   0.176   0.180
  47          PC   0.185   0.189   0.194   0.199   0.205   0.210   0.216   0.222   0.228   0.235
  48          PC   0.242   0.250   0.258   0.266   0.276   0.287   0.298   0.312   0.328   0.363
  49          PC   0.416   0.500   0.584   0.638   0.673   0.689   0.702   0.714   0.725   0.734
  50          PC   0.743   0.751   0.758   0.766   0.772   0.779   0.785   0.790   0.796   0.801
  51          PC   0.806   0.811   0.816   0.821   0.825   0.829   0.834   0.838   0.842   0.845
  52          PC   0.849   0.853   0.857   0.860   0.864   0.867   0.870   0.874   0.877   0.880
  53          PC   0.886   0.889   0.892   0.895   0.898   0.900   0.903   0.906   0.908   0.910
```

```
LINE      ID.....1.....2.....3.....4.....5.....6.....7.....8.....9.....10

  54      PC   0.911   0.913   0.915   0.917   0.919   0.920   0.922   0.924   0.925   0.927
  55      PC   0.929   0.930   0.932   0.933   0.935   0.936   0.938   0.939   0.941   0.942
  56      PC   0.944   0.945   0.946   0.948   0.949   0.951   0.952   0.953   0.955   0.956
  57      PC   0.957   0.958   0.960   0.961   0.962   0.963   0.965   0.966   0.967   0.968
  58      PC   0.969   0.971   0.972   0.973   0.974   0.975   0.976   0.977   0.978   0.979
  59      PC   0.981   0.982   0.983   0.984   0.985   0.986   0.987   0.988   0.989   0.990
  60      PC   0.991   0.992   0.993   0.994   0.995   0.996   0.997   0.998   0.999   1.000
  61      LS       1      78
  62      UD     0.1

  63      KK  SITE-2SOUTHWESTERLY SITE RUNOFF TOWARD PT.1
  64      KM
  65      KM  ************************************************************************
  66      KM  * DRAINAGE AREA = 0.31 AC = 0.0005 SQ. MI.       CN=84                 *
  67      KM  * TIME OF CONCENTRATION = 5 MIN = 0.083 HR x 0.6 (SCS LAG) = 0.050    *
  68      KM  ************************************************************************
  69      KM
  70      BA  0.0005
  71      LS       1      84
  72      UD    0.05

  73      KK  SITE-3SOUTHEASTERLY SITE RUNOFF TOWARD PT.3
  74      KM
  75      KM  ************************************************************************
  76      KM  * DRAINAGE AREA = 3.56 AC = 0.0056 SQ. MI.       CN=78                 *
  77      KM  * TIME OF CONCENTRATION = 10 MIN = 0.167 HR x 0.6 (SCS LAG) = 0.100   *
  78      KM  ************************************************************************
  79      KM
  80      BA  0.0056
  81      LS       1      78
  82      UD     0.1

  83      KK  SITE-4CENTRAL/EASTERLY SITE RUNOFF TOWARD PT.4
  84      KM
  85      KM  ************************************************************************
  86      KM  * DRAINAGE AREA = 0.91 AC = 0.0014 SQ. MI.       CN=71                 *
  87      KM  * TIME OF CONCENTRATION = 10 MIN = 0.167 HR x 0.6 (SCS LAG) = 0.100   *
  88      KM  ************************************************************************
  89      KM
  90      BA  0.0014
  91      LS       1      71
  92      UD     0.1

  93      KK   OFF-1OFFSITE SOUTHEASTERLY RUNOFF TOWARD PT.3
  94      KM
  95      KM  ************************************************************************
  96      KM  * DRAINAGE AREA = 7.85 AC = 0.0123 SQ. MI.       CN=93                 *
  97      KM  * TIME OF CONCENTRATION = 10 MIN = 0.167 HR x 0.6 (SCS LAG) = 0.100   *
  98      KM  ************************************************************************
  99      KM
 100      BA  0.0123
 101      LS       1      93
 102      UD     0.1
```



```
LINE      ID.....1.....2.....3.....4.....5.....6.....7.....8.....9.....10

 103      KK    PT.3ADD SITE-3, SITE-4 AND OFF-1 HYDROGRAPHS
 104      HC       3

 105      KK   LAG-3LAG PT.2 COMBINED HYDROGRAPH TO PT.4
 106      RT       0       0       1

 107      KK  SITE-5NORTHEASTERLY SITE RUNOFF TOWARD PT.4
 108      KM
 109      KM  ************************************************************************
 110      KM  * DRAINAGE AREA = 5.56 AC = 0.0087 SQ. MI.       CN=76                 *
 111      KM  * TIME OF CONCENTRATION = 10 MIN = 0.167 HR x 0.6 (SCS LAG) = 0.100   *
 112      KM  ************************************************************************
 113      KM
 114      BA  0.0087
 115      LS       1      76
 116      UD     0.1

 117      KK   OFF-2OFFSITE EASTERLY RUNOFF TOWARD PT.4
 118      KM
 119      KM  ************************************************************************
 120      KM  * DRAINAGE AREA = 3.32 AC = 0.0052 SQ. MI.       CN=78                 *
 121      KM  * TIME OF CONCENTRATION = 10 MIN = 0.167 HR x 0.6 (SCS LAG) = 0.100   *
 122      KM  ************************************************************************
 123      KM
 124      BA  0.0052
 125      LS       1      78
 126      UD     0.1

 127      KK    PT.4ADD LAG-2, SITE-5 AND OFF-2 HYDROGRAPHS
 128      HC       3
 129      ZZ
```

1

SCHEMATIC DIAGRAM OF STREAM NETWORK

```
INPUT
 LINE      (V) ROUTING          (--->) DIVERSION OR PUMP FLOW

  NO.      (.) CONNECTOR        (<---) RETURN OF DIVERTED OR PUMPED FLOW

   27      SITE-1
                .
                .
   63           .      SITE-2
                .           .
                .           .
   73           .           .      SITE-3
                .           .           .
                .           .           .
   83           .           .           .      SITE-4
                .           .           .           .
                .           .           .           .
   93           .           .           .           .       OFF-1
                .           .           .           .           .
                .           .           .           .           .
  103           .           .        PT.3.......................
                .           .           V
                .           .           V
  105           .           .       LAG-3
                .           .           .
                .           .           .
  107           .           .           .      SITE-5
                .           .           .           .
                .           .           .           .
  117           .           .           .           .       OFF-2
                .           .           .           .           .
                .           .           .           .           .
  127           .           .        PT.4.......................

(***) RUNOFF ALSO COMPUTED AT THIS LOCATION
1*****************************************
*                                       *
*   FLOOD HYDROGRAPH PACKAGE  (HEC-1)   *
*              MAY   1991               *
*           VERSION 4.0.1U              *
*     Lahey F77L-EM/32 version 5.01     *
*       Dodson & Associates, Inc.       *
*  RUN DATE  09/17/19  TIME  15:41:00   *
*****************************************
```

```
*****************************************
*                                       *
*    U.S. ARMY CORPS OF ENGINEERS       *
*    HYDROLOGIC ENGINEERING CENTER      *
*          609 SECOND STREET            *
*       DAVIS, CALIFORNIA 95616         *
*           (916) 551-1748              *
*                                       *
*****************************************
```

```
                    ------------input file:EX-R.ih1-------------

                HYDROLOGY FOR: OAK TREE(SY #1385)
                               TOWN OF HAVERSTRAW, ROCKLAND COUNTY, NEW YORK
                               DATE: 9-17-19

                ANALYSIS PREPARED BY: SPARACO & YOUNGBLOOD, PLLC

            ANALYSIS PARAMETERS:
            EXISTING CONDITIONS RUN
            STORM RECURRENCE INTERVALS = 1, 2, 5, 10, 25 & 100 YEAR
            HYDROGRAPH METHOD:           SCS
            RAINFALL DISTRIBUTION:       SCS TYPE III

            24 HOUR RAINFALL DATA:
            1 YEAR: 2.8 INCHES
            2 YEAR: 3.5 INCHES
            5 YEAR: 4.5 INCHES
            10 YEAR: 5.1 INCHES
            25 YEAR: 6.0 INCHES
            100 YEAR: 9.0 INCHES


  25 IO        OUTPUT CONTROL VARIABLES
                    IPRNT           3  PRINT CONTROL
                    IPLOT           0  PLOT CONTROL
                    QSCAL          0.  HYDROGRAPH PLOT SCALE

    IT         HYDROGRAPH TIME DATA
                     NMIN           6  MINUTES IN COMPUTATION INTERVAL
                    IDATE      1    0  STARTING DATE
                    ITIME        0000  STARTING TIME
                       NQ         300  NUMBER OF HYDROGRAPH ORDINATES
                   NDDATE      2    0  ENDING DATE
                   NDTIME        0554  ENDING TIME
                    ICENT          19  CENTURY MARK

                COMPUTATION INTERVAL    0.10 HOURS
                     TOTAL TIME BASE   29.90 HOURS

        ENGLISH UNITS
             DRAINAGE AREA          SQUARE MILES
             PRECIPITATION DEPTH    INCHES
             LENGTH, ELEVATION      FEET
             FLOW                   CUBIC FEET PER SECOND
```

```
                STORAGE VOLUME          ACRE-FEET
                SURFACE AREA            ACRES
                TEMPERATURE             DEGREES FAHRENHEIT

     JP           MULTI-PLAN OPTION
                       NPLAN           1  NUMBER OF PLANS

     JR           MULTI-RATIO OPTION
                      RATIOS OF PRECIPITATION
                    2.80      3.50      4.50      5.10      6.00      9.00


*** *** *** *** *** *** *** *** *** *** *** *** *** *** *** *** *** *** *** *** *** *** *** *** *** *** *** *** *** *** *** *** *** *** ***


             **************
             *            *
  27 KK      *    SITE-1  *     NORTHWESTERLY SITE RUNOFF TOWARD PT.1
             *            *
             **************

                          ************************************************************************
                          * DRAINAGE AREA = 4.14 AC = 0.0065 SQ. MI.       CN=78                 *
                          * TIME OF CONCENTRATION = 10 MIN = 0.167 HR x 0.6 (SCS LAG) = 0.100    *
                          ************************************************************************


  36 IN           TIME DATA FOR INPUT TIME SERIES
                        JXMIN           6  TIME INTERVAL IN MINUTES
                       JXDATE       1   0  STARTING DATE
                       JXTIME           0  STARTING TIME

                SUBBASIN RUNOFF DATA

  34 BA           SUBBASIN CHARACTERISTICS
                        TAREA        0.01  SUBBASIN AREA

                PRECIPITATION DATA

  35 PB                 STORM        1.00  BASIN TOTAL PRECIPITATION

  37 PI             INCREMENTAL PRECIPITATION PATTERN
                     0.00      0.00      0.00      0.00      0.00      0.00      0.00      0.00      0.00      0.00
                     0.00      0.00      0.00      0.00      0.00      0.00      0.00      0.00      0.00      0.00
                     0.00      0.00      0.00      0.00      0.00      0.00      0.00      0.00      0.00      0.00
                     0.00      0.00      0.00      0.00      0.00      0.00      0.00      0.00      0.00      0.00
                     0.00      0.00      0.00      0.00      0.00      0.00      0.00      0.00      0.00      0.00
                     0.00      0.00      0.00      0.00      0.00      0.00      0.00      0.00      0.00      0.00
                     0.00      0.00      0.00      0.00      0.00      0.00      0.00      0.00      0.00      0.00
                     0.00      0.00      0.00      0.00      0.00      0.00      0.00      0.00      0.00      0.00
                     0.00      0.00      0.00      0.00      0.00      0.00      0.00      0.00      0.00      0.00
                     0.00      0.00      0.00      0.00      0.00      0.00      0.00      0.00      0.00      0.00
                     0.00      0.01      0.00      0.01      0.00      0.01      0.01      0.01      0.01      0.01
                     0.01      0.01      0.01      0.01      0.01      0.01      0.01      0.02      0.03      0.05
                     0.08      0.08      0.05      0.03      0.02      0.01      0.01      0.01      0.01      0.01
                     0.01      0.01      0.01      0.01      0.01      0.01      0.00      0.01      0.00      0.00
                     0.00      0.00      0.00      0.00      0.00      0.00      0.00      0.00      0.00      0.00
                     0.00      0.00      0.00      0.00      0.00      0.00      0.00      0.00      0.00      0.01
                     0.00      0.00      0.00      0.00      0.00      0.00      0.00      0.00      0.00      0.00
                     0.00      0.00      0.00      0.00      0.00      0.00      0.00      0.00      0.00      0.00
                     0.00      0.00      0.00      0.00      0.00      0.00      0.00      0.00      0.00      0.00
                     0.00      0.00      0.00      0.00      0.00      0.00      0.00      0.00      0.00      0.00
                     0.00      0.00      0.00      0.00      0.00      0.00      0.00      0.00      0.00      0.00
                     0.00      0.00      0.00      0.00      0.00      0.00      0.00      0.00      0.00      0.00
                     0.00      0.00      0.00      0.00      0.00      0.00      0.00      0.00      0.00      0.00
                     0.00      0.00      0.00      0.00      0.00      0.00      0.00      0.00      0.00

  61 LS           SCS LOSS RATE
                        STRTL        1.00  INITIAL ABSTRACTION
                       CRVNBR       78.00  CURVE NUMBER
                        RTIMP        0.00  PERCENT IMPERVIOUS AREA

  62 UD           SCS DIMENSIONLESS UNITGRAPH
                          TLAG        0.10  LAG

                                                      ***

                                                  UNIT HYDROGRAPH
                                               7 END-OF-PERIOD ORDINATES
                     16.       17.        6.        2.        1.        0.        0.

        TOTAL RAINFALL =    1.00, TOTAL LOSS =    1.00, TOTAL EXCESS =    0.00

      PEAK FLOW     TIME                          MAXIMUM AVERAGE FLOW
                                          6-HR       24-HR       72-HR     29.90-HR
    +   (CFS)       (HR)
                      (CFS)
    +       0.      0.10                   0.          0.          0.          0.
                    (INCHES)          0.000       0.000       0.000       0.000
                     (AC-FT)            0.          0.          0.          0.

                     CUMULATIVE AREA =    0.01 SQ MI
```

*** *** *** *** ***

HYDROGRAPH AT STATION SITE-1
FOR PLAN 1, RATIO = 2.80

TOTAL RAINFALL = 2.80, TOTAL LOSS = 2.10, TOTAL EXCESS = 0.70

| PEAK FLOW | TIME | MAXIMUM AVERAGE FLOW | | | |
|---|---|---|---|---|---|
| | | 6-HR | 24-HR | 72-HR | 29.90-HR |
| + (CFS) | (HR) | | | | |
| | | (CFS) | | | |
| + 2. | 12.30 | 0. | 0. | 0. | 0. |
| | | (INCHES) 0.574 | 0.701 | 0.701 | 0.701 |
| | | (AC-FT) 0. | 0. | 0. | 0. |

CUMULATIVE AREA = 0.01 SQ MI

*** *** *** *** ***

HYDROGRAPH AT STATION SITE-1
FOR PLAN 1, RATIO = 3.50

TOTAL RAINFALL = 3.50, TOTAL LOSS = 2.33, TOTAL EXCESS = 1.17

| PEAK FLOW | TIME | MAXIMUM AVERAGE FLOW | | | |
|---|---|---|---|---|---|
| | | 6-HR | 24-HR | 72-HR | 29.90-HR |
| + (CFS) | (HR) | | | | |
| | | (CFS) | | | |
| + 4. | 12.30 | 1. | 0. | 0. | 0. |
| | | (INCHES) 0.982 | 1.175 | 1.175 | 1.175 |
| | | (AC-FT) 0. | 0. | 0. | 0. |

CUMULATIVE AREA = 0.01 SQ MI

*** *** *** *** ***

HYDROGRAPH AT STATION SITE-1
FOR PLAN 1, RATIO = 4.50

TOTAL RAINFALL = 4.50, TOTAL LOSS = 2.56, TOTAL EXCESS = 1.94

| PEAK FLOW | TIME | MAXIMUM AVERAGE FLOW | | | |
|---|---|---|---|---|---|
| | | 6-HR | 24-HR | 72-HR | 29.90-HR |
| + (CFS) | (HR) | | | | |
| | | (CFS) | | | |
| + 7. | 12.30 | 1. | 0. | 0. | 0. |
| | | (INCHES) 1.630 | 1.938 | 1.938 | 1.938 |
| | | (AC-FT) 1. | 1. | 1. | 1. |

CUMULATIVE AREA = 0.01 SQ MI

*** *** *** *** ***

HYDROGRAPH AT STATION SITE-1
FOR PLAN 1, RATIO = 5.10

TOTAL RAINFALL = 5.10, TOTAL LOSS = 2.67, TOTAL EXCESS = 2.43

| PEAK FLOW | TIME | MAXIMUM AVERAGE FLOW | | | |
|---|---|---|---|---|---|
| | | 6-HR | 24-HR | 72-HR | 29.90-HR |
| + (CFS) | (HR) | | | | |
| | | (CFS) | | | |
| + 9. | 12.30 | 1. | 0. | 0. | 0. |
| | | (INCHES) 2.040 | 2.429 | 2.429 | 2.429 |
| | | (AC-FT) 1. | 1. | 1. | 1. |

CUMULATIVE AREA = 0.01 SQ MI

*** *** *** *** ***

HYDROGRAPH AT STATION SITE-1
FOR PLAN 1, RATIO = 6.00

TOTAL RAINFALL = 6.00, TOTAL LOSS = 2.80, TOTAL EXCESS = 3.20

| PEAK FLOW | TIME | MAXIMUM AVERAGE FLOW | | | |
|---|---|---|---|---|---|
| | | 6-HR | 24-HR | 72-HR | 29.90-HR |
| + (CFS) | (HR) | | | | |
| | | (CFS) | | | |
| + 12. | 12.20 | 2. | 1. | 0. | 0. |
| | | (INCHES) 2.678 | 3.197 | 3.197 | 3.197 |
| | | (AC-FT) 1. | 1. | 1. | 1. |

CUMULATIVE AREA = 0.01 SQ MI

*** *** *** *** ***

HYDROGRAPH AT STATION SITE-1
FOR PLAN 1, RATIO = 9.00

```
    TOTAL RAINFALL =     9.00, TOTAL LOSS =     3.09, TOTAL EXCESS =     5.91

  PEAK FLOW      TIME                          MAXIMUM AVERAGE FLOW
                                      6-HR         24-HR         72-HR      29.90-HR
+   (CFS)        (HR)
                    (CFS)
+       22.     12.20                    3.            1.            1.            1.
                (INCHES)      4.869        5.915         5.915         5.915
                 (AC-FT)          2.           2.            2.            2.

                CUMULATIVE AREA =     0.01 SQ MI


*** *** *** *** *** *** *** *** *** *** *** *** *** *** *** *** *** *** *** *** *** *** *** *** *** *** *** *** *** *** *** *** *** ***


          **************
          *            *
  63 KK   *    SITE-2  *     SOUTHWESTERLY SITE RUNOFF TOWARD PT.1
          *            *
          **************

                  ************************************************************************
                  * DRAINAGE AREA = 0.31 AC = 0.0005 SQ. MI.       CN=84                 *
                  * TIME OF CONCENTRATION = 5 MIN = 0.083 HR x 0.6 (SCS LAG) = 0.050     *
                  ************************************************************************


             SUBBASIN RUNOFF DATA

  70 BA        SUBBASIN CHARACTERISTICS
                    TAREA        0.00  SUBBASIN AREA

             PRECIPITATION DATA

  35 PB             STORM        1.00  BASIN TOTAL PRECIPITATION

  37 PI          INCREMENTAL PRECIPITATION PATTERN
                   0.00      0.00      0.00      0.00      0.00      0.00      0.00      0.00      0.00      0.00
                   0.00      0.00      0.00      0.00      0.00      0.00      0.00      0.00      0.00      0.00
                   0.00      0.00      0.00      0.00      0.00      0.00      0.00      0.00      0.00      0.00
                   0.00      0.00      0.00      0.00      0.00      0.00      0.00      0.00      0.00      0.00
                   0.00      0.00      0.00      0.00      0.00      0.00      0.00      0.00      0.00      0.00
                   0.00      0.00      0.00      0.00      0.00      0.00      0.00      0.00      0.00      0.00
                   0.00      0.00      0.00      0.00      0.00      0.00      0.00      0.00      0.00      0.00
                   0.00      0.00      0.00      0.00      0.00      0.00      0.00      0.00      0.00      0.00
                   0.00      0.00      0.00      0.00      0.00      0.00      0.00      0.00      0.00      0.00
                   0.00      0.00      0.00      0.00      0.00      0.00      0.00      0.00      0.00      0.00
                   0.00      0.01      0.00      0.01      0.00      0.01      0.01      0.01      0.01      0.01
                   0.01      0.01      0.01      0.01      0.01      0.01      0.01      0.02      0.03      0.05
                   0.08      0.08      0.05      0.03      0.02      0.01      0.01      0.01      0.01      0.01
                   0.01      0.01      0.01      0.01      0.01      0.01      0.00      0.01      0.00      0.00
                   0.00      0.00      0.00      0.00      0.00      0.00      0.00      0.00      0.00      0.00
                   0.00      0.00      0.00      0.00      0.00      0.00      0.00      0.00      0.00      0.01
                   0.00      0.00      0.00      0.00      0.00      0.00      0.00      0.00      0.00      0.00
                   0.00      0.00      0.00      0.00      0.00      0.00      0.00      0.00      0.00      0.00
                   0.00      0.00      0.00      0.00      0.00      0.00      0.00      0.00      0.00      0.00
                   0.00      0.00      0.00      0.00      0.00      0.00      0.00      0.00      0.00      0.00
                   0.00      0.00      0.00      0.00      0.00      0.00      0.00      0.00      0.00      0.00
                   0.00      0.00      0.00      0.00      0.00      0.00      0.00      0.00      0.00      0.00
                   0.00      0.00      0.00      0.00      0.00      0.00      0.00      0.00      0.00      0.00
                   0.00      0.00      0.00      0.00      0.00      0.00      0.00      0.00      0.00

  71 LS        SCS LOSS RATE
                    STRTL        1.00  INITIAL ABSTRACTION
                   CRVNBR       84.00  CURVE NUMBER
                    RTIMP        0.00  PERCENT IMPERVIOUS AREA

  72 UD        SCS DIMENSIONLESS UNITGRAPH
                    TLAG        0.05  LAG

                                                  ***

                                                UNIT HYDROGRAPH
                                              5 END-OF-PERIOD ORDINATES
                  2.        1.        0.        0.        0.

    TOTAL RAINFALL =     1.00, TOTAL LOSS =     1.00, TOTAL EXCESS =     0.00

  PEAK FLOW      TIME                          MAXIMUM AVERAGE FLOW
                                      6-HR         24-HR         72-HR      29.90-HR
+   (CFS)        (HR)
                    (CFS)
+        0.      0.10                    0.            0.            0.            0.
                (INCHES)      0.000        0.000         0.000         0.000
                 (AC-FT)          0.           0.            0.            0.

                CUMULATIVE AREA =     0.00 SQ MI


       ***             ***             ***             ***             ***

                  HYDROGRAPH AT STATION   SITE-2
```

FOR PLAN 1, RATIO = 2.80

TOTAL RAINFALL = 2.80, TOTAL LOSS = 1.93, TOTAL EXCESS = 0.87

| PEAK FLOW | TIME | MAXIMUM AVERAGE FLOW | | | |
|---|---|---|---|---|---|
| | | 6-HR | 24-HR | 72-HR | 29.90-HR |
| + (CFS) | (HR) | | | | |
| | | (CFS) | | | |
| + 0. | 12.20 | 0. | 0. | 0. | 0. |
| | | (INCHES) 0.724 | 0.875 | 0.875 | 0.875 |
| | | (AC-FT) 0. | 0. | 0. | 0. |

CUMULATIVE AREA = 0.00 SQ MI

*** *** *** *** ***

HYDROGRAPH AT STATION SITE-2
FOR PLAN 1, RATIO = 3.50

TOTAL RAINFALL = 3.50, TOTAL LOSS = 2.08, TOTAL EXCESS = 1.42

| PEAK FLOW | TIME | MAXIMUM AVERAGE FLOW | | | |
|---|---|---|---|---|---|
| | | 6-HR | 24-HR | 72-HR | 29.90-HR |
| + (CFS) | (HR) | | | | |
| | | (CFS) | | | |
| + 0. | 12.20 | 0. | 0. | 0. | 0. |
| | | (INCHES) 1.200 | 1.419 | 1.419 | 1.419 |
| | | (AC-FT) 0. | 0. | 0. | 0. |

CUMULATIVE AREA = 0.00 SQ MI

*** *** *** *** ***

HYDROGRAPH AT STATION SITE-2
FOR PLAN 1, RATIO = 4.50

TOTAL RAINFALL = 4.50, TOTAL LOSS = 2.23, TOTAL EXCESS = 2.27

| PEAK FLOW | TIME | MAXIMUM AVERAGE FLOW | | | |
|---|---|---|---|---|---|
| | | 6-HR | 24-HR | 72-HR | 29.90-HR |
| + (CFS) | (HR) | | | | |
| | | (CFS) | | | |
| + 1. | 12.20 | 0. | 0. | 0. | 0. |
| | | (INCHES) 1.924 | 2.267 | 2.267 | 2.267 |
| | | (AC-FT) 0. | 0. | 0. | 0. |

CUMULATIVE AREA = 0.00 SQ MI

*** *** *** *** ***

HYDROGRAPH AT STATION SITE-2
FOR PLAN 1, RATIO = 5.10

TOTAL RAINFALL = 5.10, TOTAL LOSS = 2.30, TOTAL EXCESS = 2.80

| PEAK FLOW | TIME | MAXIMUM AVERAGE FLOW | | | |
|---|---|---|---|---|---|
| | | 6-HR | 24-HR | 72-HR | 29.90-HR |
| + (CFS) | (HR) | | | | |
| | | (CFS) | | | |
| + 1. | 12.20 | 0. | 0. | 0. | 0. |
| | | (INCHES) 2.370 | 2.799 | 2.799 | 2.799 |
| | | (AC-FT) 0. | 0. | 0. | 0. |

CUMULATIVE AREA = 0.00 SQ MI

*** *** *** *** ***

HYDROGRAPH AT STATION SITE-2
FOR PLAN 1, RATIO = 6.00

TOTAL RAINFALL = 6.00, TOTAL LOSS = 2.38, TOTAL EXCESS = 3.62

| PEAK FLOW | TIME | MAXIMUM AVERAGE FLOW | | | |
|---|---|---|---|---|---|
| | | 6-HR | 24-HR | 72-HR | 29.90-HR |
| + (CFS) | (HR) | | | | |
| | | (CFS) | | | |
| + 1. | 12.20 | 0. | 0. | 0. | 0. |
| | | (INCHES) 3.054 | 3.621 | 3.621 | 3.621 |
| | | (AC-FT) 0. | 0. | 0. | 0. |

CUMULATIVE AREA = 0.00 SQ MI

*** *** *** *** ***

HYDROGRAPH AT STATION SITE-2
FOR PLAN 1, RATIO = 9.00

TOTAL RAINFALL = 9.00, TOTAL LOSS = 2.54, TOTAL EXCESS = 6.46

| PEAK FLOW | TIME | MAXIMUM AVERAGE FLOW |
|---|---|---|

```
                                        6-HR        24-HR       72-HR      29.90-HR
+   (CFS)        (HR)
                      (CFS)
+       2.      12.20                    0.          0.          0.          0.
                    (INCHES)         5.322       6.462       6.462       6.462
                    (AC-FT)             0.          0.          0.          0.

                    CUMULATIVE AREA =     0.00 SQ MI


*** *** *** *** *** *** *** *** *** *** *** *** *** *** *** *** *** *** *** *** *** *** *** *** *** *** *** *** *** *** *** *** *** ***


          **************
          *            *
 73 KK    *    SITE-3  *     SOUTHEASTERLY SITE RUNOFF TOWARD PT.3
          *            *
          **************

                    ************************************************************************
                    * DRAINAGE AREA = 3.56 AC = 0.0056 SQ. MI.       CN=78                 *
                    * TIME OF CONCENTRATION = 10 MIN = 0.167 HR x 0.6 (SCS LAG) = 0.100    *
                    ************************************************************************

             SUBBASIN RUNOFF DATA

 80 BA         SUBBASIN CHARACTERISTICS
                    TAREA        0.01  SUBBASIN AREA

             PRECIPITATION DATA

 35 PB              STORM        1.00  BASIN TOTAL PRECIPITATION

 37 PI           INCREMENTAL PRECIPITATION PATTERN
                   0.00      0.00      0.00      0.00      0.00      0.00      0.00      0.00      0.00      0.00
                   0.00      0.00      0.00      0.00      0.00      0.00      0.00      0.00      0.00      0.00
                   0.00      0.00      0.00      0.00      0.00      0.00      0.00      0.00      0.00      0.00
                   0.00      0.00      0.00      0.00      0.00      0.00      0.00      0.00      0.00      0.00
                   0.00      0.00      0.00      0.00      0.00      0.00      0.00      0.00      0.00      0.00
                   0.00      0.00      0.00      0.00      0.00      0.00      0.00      0.00      0.00      0.00
                   0.00      0.00      0.00      0.00      0.00      0.00      0.00      0.00      0.00      0.00
                   0.00      0.00      0.00      0.00      0.00      0.00      0.00      0.00      0.00      0.00
                   0.00      0.00      0.00      0.00      0.00      0.00      0.00      0.00      0.00      0.00
                   0.00      0.00      0.00      0.00      0.00      0.00      0.00      0.00      0.00      0.00
                   0.00      0.01      0.00      0.01      0.00      0.01      0.01      0.01      0.01      0.01
                   0.01      0.01      0.01      0.01      0.01      0.01      0.01      0.02      0.03      0.05
                   0.08      0.08      0.05      0.03      0.02      0.01      0.01      0.01      0.01      0.01
                   0.01      0.01      0.01      0.01      0.01      0.01      0.00      0.01      0.00      0.00
                   0.00      0.00      0.00      0.00      0.00      0.00      0.00      0.00      0.00      0.00
                   0.00      0.00      0.00      0.00      0.00      0.00      0.00      0.00      0.00      0.01
                   0.00      0.00      0.00      0.00      0.00      0.00      0.00      0.00      0.00      0.00
                   0.00      0.00      0.00      0.00      0.00      0.00      0.00      0.00      0.00      0.00
                   0.00      0.00      0.00      0.00      0.00      0.00      0.00      0.00      0.00      0.00
                   0.00      0.00      0.00      0.00      0.00      0.00      0.00      0.00      0.00      0.00
                   0.00      0.00      0.00      0.00      0.00      0.00      0.00      0.00      0.00      0.00
                   0.00      0.00      0.00      0.00      0.00      0.00      0.00      0.00      0.00      0.00
                   0.00      0.00      0.00      0.00      0.00      0.00      0.00      0.00      0.00      0.00
                   0.00      0.00      0.00      0.00      0.00      0.00      0.00      0.00      0.00

 81 LS         SCS LOSS RATE
                    STRTL        1.00  INITIAL ABSTRACTION
                   CRVNBR       78.00  CURVE NUMBER
                    RTIMP        0.00  PERCENT IMPERVIOUS AREA

 82 UD         SCS DIMENSIONLESS UNITGRAPH
                    TLAG        0.10  LAG

                                                  ***

                                                UNIT HYDROGRAPH
                                              7 END-OF-PERIOD ORDINATES
                  14.       15.        5.        2.        1.        0.        0.

     TOTAL RAINFALL =     1.00, TOTAL LOSS =     1.00, TOTAL EXCESS =     0.00

  PEAK FLOW     TIME                          MAXIMUM AVERAGE FLOW
                                        6-HR        24-HR       72-HR      29.90-HR
+   (CFS)        (HR)
                      (CFS)
+       0.      0.10                     0.          0.          0.          0.
                    (INCHES)         0.000       0.000       0.000       0.000
                    (AC-FT)             0.          0.          0.          0.

                    CUMULATIVE AREA =     0.01 SQ MI


       ***             ***             ***             ***             ***

                      HYDROGRAPH AT STATION   SITE-3
                        FOR PLAN 1, RATIO = 2.80

     TOTAL RAINFALL =     2.80, TOTAL LOSS =     2.10, TOTAL EXCESS =     0.70
```

| PEAK FLOW | TIME | | MAXIMUM AVERAGE FLOW | | | |
|---|---|---|---|---|---|---|
| | | | 6-HR | 24-HR | 72-HR | 29.90-HR |
| + (CFS) | (HR) | | | | | |
| | | (CFS) | | | | |
| + 2. | 12.30 | | 0. | 0. | 0. | 0. |
| | | (INCHES) | 0.574 | 0.701 | 0.701 | 0.701 |
| | | (AC-FT) | 0. | 0. | 0. | 0. |

CUMULATIVE AREA = 0.01 SQ MI

*** *** *** *** ***

HYDROGRAPH AT STATION SITE-3
FOR PLAN 1, RATIO = 3.50

TOTAL RAINFALL = 3.50, TOTAL LOSS = 2.33, TOTAL EXCESS = 1.17

| PEAK FLOW | TIME | | MAXIMUM AVERAGE FLOW | | | |
|---|---|---|---|---|---|---|
| | | | 6-HR | 24-HR | 72-HR | 29.90-HR |
| + (CFS) | (HR) | | | | | |
| | | (CFS) | | | | |
| + 4. | 12.30 | | 1. | 0. | 0. | 0. |
| | | (INCHES) | 0.982 | 1.175 | 1.175 | 1.175 |
| | | (AC-FT) | 0. | 0. | 0. | 0. |

CUMULATIVE AREA = 0.01 SQ MI

*** *** *** *** ***

HYDROGRAPH AT STATION SITE-3
FOR PLAN 1, RATIO = 4.50

TOTAL RAINFALL = 4.50, TOTAL LOSS = 2.56, TOTAL EXCESS = 1.94

| PEAK FLOW | TIME | | MAXIMUM AVERAGE FLOW | | | |
|---|---|---|---|---|---|---|
| | | | 6-HR | 24-HR | 72-HR | 29.90-HR |
| + (CFS) | (HR) | | | | | |
| | | (CFS) | | | | |
| + 6. | 12.30 | | 1. | 0. | 0. | 0. |
| | | (INCHES) | 1.630 | 1.938 | 1.938 | 1.938 |
| | | (AC-FT) | 0. | 1. | 1. | 1. |

CUMULATIVE AREA = 0.01 SQ MI

*** *** *** *** ***

HYDROGRAPH AT STATION SITE-3
FOR PLAN 1, RATIO = 5.10

TOTAL RAINFALL = 5.10, TOTAL LOSS = 2.67, TOTAL EXCESS = 2.43

| PEAK FLOW | TIME | | MAXIMUM AVERAGE FLOW | | | |
|---|---|---|---|---|---|---|
| | | | 6-HR | 24-HR | 72-HR | 29.90-HR |
| + (CFS) | (HR) | | | | | |
| | | (CFS) | | | | |
| + 8. | 12.30 | | 1. | 0. | 0. | 0. |
| | | (INCHES) | 2.040 | 2.429 | 2.429 | 2.429 |
| | | (AC-FT) | 1. | 1. | 1. | 1. |

CUMULATIVE AREA = 0.01 SQ MI

*** *** *** *** ***

HYDROGRAPH AT STATION SITE-3
FOR PLAN 1, RATIO = 6.00

TOTAL RAINFALL = 6.00, TOTAL LOSS = 2.80, TOTAL EXCESS = 3.20

| PEAK FLOW | TIME | | MAXIMUM AVERAGE FLOW | | | |
|---|---|---|---|---|---|---|
| | | | 6-HR | 24-HR | 72-HR | 29.90-HR |
| + (CFS) | (HR) | | | | | |
| | | (CFS) | | | | |
| + 10. | 12.20 | | 2. | 0. | 0. | 0. |
| | | (INCHES) | 2.678 | 3.197 | 3.197 | 3.197 |
| | | (AC-FT) | 1. | 1. | 1. | 1. |

CUMULATIVE AREA = 0.01 SQ MI

*** *** *** *** ***

HYDROGRAPH AT STATION SITE-3
FOR PLAN 1, RATIO = 9.00

TOTAL RAINFALL = 9.00, TOTAL LOSS = 3.09, TOTAL EXCESS = 5.91

| PEAK FLOW | TIME | | MAXIMUM AVERAGE FLOW | | | |
|---|---|---|---|---|---|---|
| | | | 6-HR | 24-HR | 72-HR | 29.90-HR |
| + (CFS) | (HR) | | | | | |
| | | (CFS) | | | | |

```
+      19.     12.20                    3.          1.          1.          1.
                          (INCHES)     4.869       5.915       5.915       5.915
                           (AC-FT)       1.          2.          2.          2.

                          CUMULATIVE AREA =     0.01 SQ MI


*** *** *** *** *** *** *** *** *** *** *** *** *** *** *** *** *** *** *** *** *** *** *** *** *** *** *** *** *** *** *** *** *** *** ***

               **************
               *            *
  83 KK        *    SITE-4  *     CENTRAL/EASTERLY SITE RUNOFF TOWARD PT.4
               *            *
               **************

                         ************************************************************************
                         * DRAINAGE AREA = 0.91 AC = 0.0014 SQ. MI.      CN=71                  *
                         * TIME OF CONCENTRATION = 10 MIN = 0.167 HR x 0.6 (SCS LAG) = 0.100    *
                         ************************************************************************

                  SUBBASIN RUNOFF DATA

  90 BA             SUBBASIN CHARACTERISTICS
                          TAREA         0.00  SUBBASIN AREA

                    PRECIPITATION DATA

  35 PB                   STORM         1.00  BASIN TOTAL PRECIPITATION

  37 PI               INCREMENTAL PRECIPITATION PATTERN
                      0.00      0.00      0.00      0.00      0.00      0.00      0.00      0.00      0.00      0.00
                      0.00      0.00      0.00      0.00      0.00      0.00      0.00      0.00      0.00      0.00
                      0.00      0.00      0.00      0.00      0.00      0.00      0.00      0.00      0.00      0.00
                      0.00      0.00      0.00      0.00      0.00      0.00      0.00      0.00      0.00      0.00
                      0.00      0.00      0.00      0.00      0.00      0.00      0.00      0.00      0.00      0.00
                      0.00      0.00      0.00      0.00      0.00      0.00      0.00      0.00      0.00      0.00
                      0.00      0.00      0.00      0.00      0.00      0.00      0.00      0.00      0.00      0.00
                      0.00      0.00      0.00      0.00      0.00      0.00      0.00      0.00      0.00      0.00
                      0.00      0.00      0.00      0.00      0.00      0.00      0.00      0.00      0.00      0.00
                      0.00      0.00      0.00      0.00      0.00      0.00      0.00      0.00      0.00      0.00
                      0.00      0.01      0.00      0.01      0.00      0.01      0.01      0.01      0.01      0.01
                      0.01      0.01      0.01      0.01      0.01      0.01      0.01      0.02      0.03      0.05
                      0.08      0.08      0.05      0.03      0.02      0.01      0.01      0.01      0.01      0.01
                      0.01      0.01      0.01      0.01      0.01      0.01      0.00      0.01      0.00      0.00
                      0.00      0.00      0.00      0.00      0.00      0.00      0.00      0.00      0.00      0.00
                      0.00      0.00      0.00      0.00      0.00      0.00      0.00      0.00      0.00      0.01
                      0.00      0.00      0.00      0.00      0.00      0.00      0.00      0.00      0.00      0.00
                      0.00      0.00      0.00      0.00      0.00      0.00      0.00      0.00      0.00      0.00
                      0.00      0.00      0.00      0.00      0.00      0.00      0.00      0.00      0.00      0.00
                      0.00      0.00      0.00      0.00      0.00      0.00      0.00      0.00      0.00      0.00
                      0.00      0.00      0.00      0.00      0.00      0.00      0.00      0.00      0.00      0.00
                      0.00      0.00      0.00      0.00      0.00      0.00      0.00      0.00      0.00      0.00
                      0.00      0.00      0.00      0.00      0.00      0.00      0.00      0.00      0.00      0.00
                      0.00      0.00      0.00      0.00      0.00      0.00      0.00      0.00      0.00

  91 LS             SCS LOSS RATE
                          STRTL         1.00  INITIAL ABSTRACTION
                         CRVNBR        71.00  CURVE NUMBER
                          RTIMP         0.00  PERCENT IMPERVIOUS AREA

  92 UD             SCS DIMENSIONLESS UNITGRAPH
                          TLAG         0.10  LAG

                                                        ***

                                                    UNIT HYDROGRAPH
                                                 7 END-OF-PERIOD ORDINATES
                      3.        4.        1.        0.        0.        0.        0.

     TOTAL RAINFALL =     1.00, TOTAL LOSS =     1.00, TOTAL EXCESS =     0.00

  PEAK FLOW     TIME                          MAXIMUM AVERAGE FLOW
                                      6-HR        24-HR        72-HR     29.90-HR
+    (CFS)       (HR)
                    (CFS)
+       0.      0.10                    0.          0.          0.          0.
                          (INCHES)     0.000       0.000       0.000       0.000
                           (AC-FT)       0.          0.          0.          0.

                          CUMULATIVE AREA =     0.00 SQ MI


       ***             ***             ***             ***             ***

                         HYDROGRAPH AT STATION   SITE-4
                           FOR PLAN 1, RATIO = 2.80

     TOTAL RAINFALL =     2.80, TOTAL LOSS =     2.25, TOTAL EXCESS =     0.55

  PEAK FLOW     TIME                          MAXIMUM AVERAGE FLOW
                                      6-HR        24-HR        72-HR     29.90-HR
```

```
+   (CFS)        (HR)
                          (CFS)
+       0.      12.30                  0.          0.          0.          0.
                        (INCHES)     0.446       0.551       0.551       0.551
                         (AC-FT)       0.          0.          0.          0.

                         CUMULATIVE AREA =    0.00 SQ MI


      ***             ***             ***             ***             ***

                          HYDROGRAPH AT STATION   SITE-4
                            FOR PLAN 1, RATIO = 3.50

    TOTAL RAINFALL =    3.50, TOTAL LOSS =    2.55, TOTAL EXCESS =    0.95

  PEAK FLOW     TIME                          MAXIMUM AVERAGE FLOW
                                     6-HR        24-HR       72-HR     29.90-HR
+   (CFS)        (HR)
                          (CFS)
+       1.      12.30                  0.          0.          0.          0.
                        (INCHES)     0.786       0.949       0.949       0.949
                         (AC-FT)       0.          0.          0.          0.

                         CUMULATIVE AREA =    0.00 SQ MI


      ***             ***             ***             ***             ***

                          HYDROGRAPH AT STATION   SITE-4
                            FOR PLAN 1, RATIO = 4.50

    TOTAL RAINFALL =    4.50, TOTAL LOSS =    2.88, TOTAL EXCESS =    1.62

  PEAK FLOW     TIME                          MAXIMUM AVERAGE FLOW
                                     6-HR        24-HR       72-HR     29.90-HR
+   (CFS)        (HR)
                          (CFS)
+       1.      12.30                  0.          0.          0.          0.
                        (INCHES)     1.346       1.615       1.615       1.615
                         (AC-FT)       0.          0.          0.          0.

                         CUMULATIVE AREA =    0.00 SQ MI


      ***             ***             ***             ***             ***

                          HYDROGRAPH AT STATION   SITE-4
                            FOR PLAN 1, RATIO = 5.10

    TOTAL RAINFALL =    5.10, TOTAL LOSS =    3.05, TOTAL EXCESS =    2.05

  PEAK FLOW     TIME                          MAXIMUM AVERAGE FLOW
                                     6-HR        24-HR       72-HR     29.90-HR
+   (CFS)        (HR)
                          (CFS)
+       2.      12.30                  0.          0.          0.          0.
                        (INCHES)     1.712       2.054       2.054       2.054
                         (AC-FT)       0.          0.          0.          0.

                         CUMULATIVE AREA =    0.00 SQ MI


      ***             ***             ***             ***             ***

                          HYDROGRAPH AT STATION   SITE-4
                            FOR PLAN 1, RATIO = 6.00

    TOTAL RAINFALL =    6.00, TOTAL LOSS =    3.25, TOTAL EXCESS =    2.75

  PEAK FLOW     TIME                          MAXIMUM AVERAGE FLOW
                                     6-HR        24-HR       72-HR     29.90-HR
+   (CFS)        (HR)
                          (CFS)
+       2.      12.30                  0.          0.          0.          0.
                        (INCHES)     2.288       2.752       2.752       2.752
                         (AC-FT)       0.          0.          0.          0.

                         CUMULATIVE AREA =    0.00 SQ MI


      ***             ***             ***             ***             ***

                          HYDROGRAPH AT STATION   SITE-4
                            FOR PLAN 1, RATIO = 9.00

    TOTAL RAINFALL =    9.00, TOTAL LOSS =    3.70, TOTAL EXCESS =    5.30

  PEAK FLOW     TIME                          MAXIMUM AVERAGE FLOW
                                     6-HR        24-HR       72-HR     29.90-HR
+   (CFS)        (HR)
                          (CFS)
+       4.      12.20                  1.          0.          0.          0.
                        (INCHES)     4.354       5.296       5.296       5.296
                         (AC-FT)       0.          0.          0.          0.
```

CUMULATIVE AREA = 0.00 SQ MI

*** *** *** *** *** *** *** *** *** *** *** *** *** *** *** *** *** *** *** *** *** *** *** *** *** *** *** *** *** *** *** *** *** *** ***

```
          **************
          *            *
 93 KK    *     OFF-1  *     OFFSITE SOUTHEASTERLY RUNOFF TOWARD PT.3
          *            *
          **************

                    ************************************************************************
                    * DRAINAGE AREA = 7.85 AC = 0.0123 SQ. MI.      CN=93                  *
                    * TIME OF CONCENTRATION = 10 MIN = 0.167 HR x 0.6 (SCS LAG) = 0.100    *
                    ************************************************************************

              SUBBASIN RUNOFF DATA

 100 BA         SUBBASIN CHARACTERISTICS
                     TAREA        0.01  SUBBASIN AREA

                PRECIPITATION DATA

  35 PB              STORM        1.00  BASIN TOTAL PRECIPITATION

  37 PI           INCREMENTAL PRECIPITATION PATTERN
                    0.00       0.00       0.00       0.00       0.00       0.00       0.00       0.00       0.00       0.00
```

| | | | | |
|---|---|---|---|---|
| (INCHES) | 1.078 | 1.269 | 1.269 | 1.269 |
| (AC-FT) | 1. | 1. | 1. | 1. |

CUMULATIVE AREA = 0.01 SQ MI

*** *** *** *** ***

HYDROGRAPH AT STATION OFF-1
FOR PLAN 1, RATIO = 3.50

TOTAL RAINFALL = 3.50, TOTAL LOSS = 1.58, TOTAL EXCESS = 1.92

| PEAK FLOW | TIME | MAXIMUM AVERAGE FLOW | | | |
|---|---|---|---|---|---|
| | | 6-HR | 24-HR | 72-HR | 29.90-HR |
| + (CFS) | (HR) | | | | |
| | | (CFS) | | | |
| + 15. | 12.30 | 2. | 1. | 1. | 1. |
| | | (INCHES) 1.659 | 1.921 | 1.921 | 1.921 |
| | | (AC-FT) 1. | 1. | 1. | 1. |

CUMULATIVE AREA = 0.01 SQ MI

*** *** *** *** ***

HYDROGRAPH AT STATION OFF-1
FOR PLAN 1, RATIO = 4.50

TOTAL RAINFALL = 4.50, TOTAL LOSS = 1.62, TOTAL EXCESS = 2.88

| PEAK FLOW | TIME | MAXIMUM AVERAGE FLOW | | | |
|---|---|---|---|---|---|
| | | 6-HR | 24-HR | 72-HR | 29.90-HR |
| + (CFS) | (HR) | | | | |
| | | (CFS) | | | |
| + 23. | 12.20 | 3. | 1. | 1. | 1. |
| | | (INCHES) 2.484 | 2.881 | 2.881 | 2.881 |
| | | (AC-FT) 2. | 2. | 2. | 2. |

CUMULATIVE AREA = 0.01 SQ MI

*** *** *** *** ***

HYDROGRAPH AT STATION OFF-1
FOR PLAN 1, RATIO = 5.10

TOTAL RAINFALL = 5.10, TOTAL LOSS = 1.64, TOTAL EXCESS = 3.46

| PEAK FLOW | TIME | MAXIMUM AVERAGE FLOW | | | |
|---|---|---|---|---|---|
| | | 6-HR | 24-HR | 72-HR | 29.90-HR |
| + (CFS) | (HR) | | | | |
| | | (CFS) | | | |
| + 27. | 12.20 | 4. | 1. | 1. | 1. |
| | | (INCHES) 2.976 | 3.464 | 3.464 | 3.464 |
| | | (AC-FT) 2. | 2. | 2. | 2. |

CUMULATIVE AREA = 0.01 SQ MI

*** *** *** *** ***

HYDROGRAPH AT STATION OFF-1
FOR PLAN 1, RATIO = 6.00

TOTAL RAINFALL = 6.00, TOTAL LOSS = 1.65, TOTAL EXCESS = 4.35

| PEAK FLOW | TIME | MAXIMUM AVERAGE FLOW | | | |
|---|---|---|---|---|---|
| | | 6-HR | 24-HR | 72-HR | 29.90-HR |
| + (CFS) | (HR) | | | | |
| | | (CFS) | | | |
| + 33. | 12.20 | 5. | 1. | 1. | 1. |
| | | (INCHES) 3.691 | 4.346 | 4.346 | 4.346 |
| | | (AC-FT) 2. | 3. | 3. | 3. |

CUMULATIVE AREA = 0.01 SQ MI

*** *** *** *** ***

HYDROGRAPH AT STATION OFF-1
FOR PLAN 1, RATIO = 9.00

TOTAL RAINFALL = 9.00, TOTAL LOSS = 1.69, TOTAL EXCESS = 7.31

| PEAK FLOW | TIME | MAXIMUM AVERAGE FLOW | | | |
|---|---|---|---|---|---|
| | | 6-HR | 24-HR | 72-HR | 29.90-HR |
| + (CFS) | (HR) | | | | |
| | | (CFS) | | | |
| + 52. | 12.20 | 8. | 2. | 2. | 2. |
| | | (INCHES) 5.979 | 7.312 | 7.312 | 7.312 |
| | | (AC-FT) 4. | 5. | 5. | 5. |

CUMULATIVE AREA = 0.01 SQ MI

```
*** *** *** *** *** *** *** *** *** *** *** *** *** *** *** *** *** *** *** *** *** *** *** *** *** *** *** *** *** *** *** *** ***

            **************
            *            *
 103 KK     *     PT.3   *     ADD SITE-3, SITE-4 AND OFF-1 HYDROGRAPHS
            *            *
            **************

 104 HC          HYDROGRAPH COMBINATION
                      ICOMP           3  NUMBER OF HYDROGRAPHS TO COMBINE

                                                                  ***

      ***             ***             ***             ***             ***

                        HYDROGRAPH AT STATION     PT.3
                          FOR PLAN 1, RATIO = 2.80

  PEAK FLOW     TIME                          MAXIMUM AVERAGE FLOW
                                     6-HR       24-HR       72-HR     29.90-HR
+   (CFS)       (HR)
                          (CFS)
+      12.     12.30                  2.          1.          0.          0.
                        (INCHES)    0.885       1.052       1.052       1.052
                         (AC-FT)      1.          1.          1.          1.

                        CUMULATIVE AREA =    0.02 SQ MI

      ***             ***             ***             ***             ***

                        HYDROGRAPH AT STATION     PT.3
                          FOR PLAN 1, RATIO = 3.50

  PEAK FLOW     TIME                          MAXIMUM AVERAGE FLOW
                                     6-HR       24-HR       72-HR     29.90-HR
+   (CFS)       (HR)
                          (CFS)
+      19.     12.30                  3.          1.          1.          1.
                        (INCHES)    1.399       1.634       1.634       1.634
                         (AC-FT)      1.          2.          2.          2.

                        CUMULATIVE AREA =    0.02 SQ MI

      ***             ***             ***             ***             ***

                        HYDROGRAPH AT STATION     PT.3
                          FOR PLAN 1, RATIO = 4.50

  PEAK FLOW     TIME                          MAXIMUM AVERAGE FLOW
                                     6-HR       24-HR       72-HR     29.90-HR
+   (CFS)       (HR)
                          (CFS)
+      30.     12.20                  4.          1.          1.          1.
                        (INCHES)    2.151       2.515       2.515       2.515
                         (AC-FT)      2.          3.          3.          3.

                        CUMULATIVE AREA =    0.02 SQ MI

      ***             ***             ***             ***             ***

                        HYDROGRAPH AT STATION     PT.3
                          FOR PLAN 1, RATIO = 5.10

  PEAK FLOW     TIME                          MAXIMUM AVERAGE FLOW
                                     6-HR       24-HR       72-HR     29.90-HR
+   (CFS)       (HR)
                          (CFS)
+      36.     12.20                  5.          2.          1.          1.
                        (INCHES)    2.610       3.061       3.061       3.061
                         (AC-FT)      3.          3.          3.          3.

                        CUMULATIVE AREA =    0.02 SQ MI

      ***             ***             ***             ***             ***

                        HYDROGRAPH AT STATION     PT.3
                          FOR PLAN 1, RATIO = 6.00

  PEAK FLOW     TIME                          MAXIMUM AVERAGE FLOW
                                     6-HR       24-HR       72-HR     29.90-HR
+   (CFS)       (HR)
                          (CFS)
+      46.     12.20                  7.          2.          2.          2.
                        (INCHES)    3.292       3.897       3.897       3.897
                         (AC-FT)      3.          4.          4.          4.

                        CUMULATIVE AREA =    0.02 SQ MI
```

```
      ***            ***            ***            ***            ***

                        HYDROGRAPH AT STATION     PT.3
                          FOR PLAN 1, RATIO = 9.00

  PEAK FLOW     TIME                          MAXIMUM AVERAGE FLOW
                                      6-HR       24-HR       72-HR     29.90-HR
+   (CFS)       (HR)
                          (CFS)
+      76.     12.20                   11.          4.          3.           3.
                        (INCHES)     5.531       6.760       6.760        6.760
                         (AC-FT)        6.          7.          7.           7.

                        CUMULATIVE AREA =    0.02 SQ MI


*** *** *** *** *** *** *** *** *** *** *** *** *** *** *** *** *** *** *** *** *** *** *** *** *** *** *** *** *** *** *** *** ***


            **************
            *            *
  105 KK    *     LAG-3  *     LAG PT.2 COMBINED HYDROGRAPH TO PT.4
            *            *
            **************

               HYDROGRAPH ROUTING DATA

  106 RT          TATUM OR STRADDLE-STAGGER ROUTING
                       NSTPS            0   NUMBER OF TATUM STEPS
                       NSTDL            0   NUMBER OF ORDINATES TO BE AVERAGED
                       LAG              1   NUMBER OF INTERVALS TO LAG HYDROGRAPH

                                                                  ***

      ***            ***            ***            ***            ***

                        HYDROGRAPH AT STATION    LAG-3
                          FOR PLAN 1, RATIO = 2.80

  PEAK FLOW     TIME                          MAXIMUM AVERAGE FLOW
                                      6-HR       24-HR       72-HR     29.90-HR
+   (CFS)       (HR)
                          (CFS)
+      12.     12.40                    2.          1.          0.           0.
                        (INCHES)     0.885       1.052       1.052        1.052
                         (AC-FT)        1.          1.          1.           1.

                        CUMULATIVE AREA =    0.02 SQ MI

      ***            ***            ***            ***            ***

                        HYDROGRAPH AT STATION    LAG-3
                          FOR PLAN 1, RATIO = 3.50

  PEAK FLOW     TIME                          MAXIMUM AVERAGE FLOW
                                      6-HR       24-HR       72-HR     29.90-HR
+   (CFS)       (HR)
                          (CFS)
+      19.     12.40                    3.          1.          1.           1.
                        (INCHES)     1.399       1.634       1.634        1.634
                         (AC-FT)        1.          2.          2.           2.

                        CUMULATIVE AREA =    0.02 SQ MI

      ***            ***            ***            ***            ***

                        HYDROGRAPH AT STATION    LAG-3
                          FOR PLAN 1, RATIO = 4.50

  PEAK FLOW     TIME                          MAXIMUM AVERAGE FLOW
                                      6-HR       24-HR       72-HR     29.90-HR
+   (CFS)       (HR)
                          (CFS)
+      30.     12.30                    4.          1.          1.           1.
                        (INCHES)     2.151       2.515       2.515        2.515
                         (AC-FT)        2.          3.          3.           3.

                        CUMULATIVE AREA =    0.02 SQ MI

      ***            ***            ***            ***            ***

                        HYDROGRAPH AT STATION    LAG-3
                          FOR PLAN 1, RATIO = 5.10

  PEAK FLOW     TIME                          MAXIMUM AVERAGE FLOW
                                      6-HR       24-HR       72-HR     29.90-HR
+   (CFS)       (HR)
                          (CFS)
```

```
+      36.     12.30                    5.          2.          1.          1.
                          (INCHES)     2.610       3.061       3.061       3.061
                          (AC-FT)        3.          3.          3.          3.

                        CUMULATIVE AREA =    0.02 SQ MI


       ***             ***             ***             ***             ***

                        HYDROGRAPH AT STATION    LAG-3
                          FOR PLAN 1, RATIO = 6.00

  PEAK FLOW     TIME                          MAXIMUM AVERAGE FLOW
                                    6-HR        24-HR       72-HR     29.90-HR
+   (CFS)       (HR)
                          (CFS)
+      46.     12.30                    7.          2.          2.          2.
                          (INCHES)     3.292       3.897       3.897       3.897
                          (AC-FT)        3.          4.          4.          4.

                        CUMULATIVE AREA =    0.02 SQ MI


       ***             ***             ***             ***             ***

                        HYDROGRAPH AT STATION    LAG-3
                          FOR PLAN 1, RATIO = 9.00

  PEAK FLOW     TIME                          MAXIMUM AVERAGE FLOW
                                    6-HR        24-HR       72-HR     29.90-HR
+   (CFS)       (HR)
                          (CFS)
+      76.     12.30                   11.          4.          3.          3.
                          (INCHES)     5.531       6.760       6.760       6.760
                          (AC-FT)        6.          7.          7.          7.

                        CUMULATIVE AREA =    0.02 SQ MI


*** *** *** *** *** *** *** *** *** *** *** *** *** *** *** *** *** *** *** *** *** *** *** *** *** *** *** *** *** *** *** *** *** *** ***


            **************
            *            *
  107 KK    *   SITE-5   *     NORTHEASTERLY SITE RUNOFF TOWARD PT.4
            *            *
            **************

                        ************************************************************************
                        * DRAINAGE AREA = 5.56 AC = 0.0087 SQ. MI.      CN=76                  *
                        * TIME OF CONCENTRATION = 10 MIN = 0.167 HR x 0.6 (SCS LAG) = 0.100    *
                        ************************************************************************


                    SUBBASIN RUNOFF DATA

  114 BA              SUBBASIN CHARACTERISTICS
                            TAREA        0.01  SUBBASIN AREA

                    PRECIPITATION DATA

   35 PB                  STORM        1.00  BASIN TOTAL PRECIPITATION

   37 PI                INCREMENTAL PRECIPITATION PATTERN
                          0.00      0.00      0.00      0.00      0.00      0.00      0.00      0.00      0.00      0.00
                          0.00      0.00      0.00      0.00      0.00      0.00      0.00      0.00      0.00      0.00
                          0.00      0.00      0.00      0.00      0.00      0.00      0.00      0.00      0.00      0.00
                          0.00      0.00      0.00      0.00      0.00      0.00      0.00      0.00      0.00      0.00
                          0.00      0.00      0.00      0.00      0.00      0.00      0.00      0.00      0.00      0.00
                          0.00      0.00      0.00      0.00      0.00      0.00      0.00      0.00      0.00      0.00
                          0.00      0.00      0.00      0.00      0.00      0.00      0.00      0.00      0.00      0.00
                          0.00      0.00      0.00      0.00      0.00      0.00      0.00      0.00      0.00      0.00
                          0.00      0.00      0.00      0.00      0.00      0.00      0.00      0.00      0.00      0.00
                          0.00      0.00      0.00      0.00      0.00      0.00      0.00      0.00      0.00      0.00
                          0.00      0.01      0.00      0.01      0.00      0.01      0.01      0.01      0.01      0.01
                          0.01      0.01      0.01      0.01      0.01      0.01      0.01      0.02      0.03      0.05
                          0.08      0.08      0.05      0.03      0.02      0.01      0.01      0.01      0.01      0.01
                          0.01      0.01      0.01      0.01      0.01      0.01      0.00      0.01      0.00      0.00
                          0.00      0.00      0.00      0.00      0.00      0.00      0.00      0.00      0.00      0.00
                          0.00      0.00      0.00      0.00      0.00      0.00      0.00      0.00      0.00      0.01
                          0.00      0.00      0.00      0.00      0.00      0.00      0.00      0.00      0.00      0.00
                          0.00      0.00      0.00      0.00      0.00      0.00      0.00      0.00      0.00      0.00
                          0.00      0.00      0.00      0.00      0.00      0.00      0.00      0.00      0.00      0.00
                          0.00      0.00      0.00      0.00      0.00      0.00      0.00      0.00      0.00      0.00
                          0.00      0.00      0.00      0.00      0.00      0.00      0.00      0.00      0.00      0.00
                          0.00      0.00      0.00      0.00      0.00      0.00      0.00      0.00      0.00      0.00
                          0.00      0.00      0.00      0.00      0.00      0.00      0.00      0.00      0.00

  115 LS              SCS LOSS RATE
                            STRTL        1.00  INITIAL ABSTRACTION
                           CRVNBR       76.00  CURVE NUMBER
                            RTIMP        0.00  PERCENT IMPERVIOUS AREA
```

```
116 UD          SCS DIMENSIONLESS UNITGRAPH
                      TLAG        0.10  LAG

                                                                    ***

                                                              UNIT HYDROGRAPH
                                                          7 END-OF-PERIOD ORDINATES
                21.       23.        8.        3.        1.        0.        0.

    TOTAL RAINFALL =    1.00, TOTAL LOSS =    1.00, TOTAL EXCESS =    0.00

  PEAK FLOW     TIME                          MAXIMUM AVERAGE FLOW
                                      6-HR       24-HR       72-HR     29.90-HR
+   (CFS)       (HR)
                          (CFS)
+       0.      0.10                    0.          0.          0.          0.
                        (INCHES)     0.000       0.000       0.000       0.000
                         (AC-FT)        0.          0.          0.          0.

                        CUMULATIVE AREA =    0.01 SQ MI

      ***             ***             ***             ***             ***

                         HYDROGRAPH AT STATION   SITE-5
                           FOR PLAN 1, RATIO = 2.80

    TOTAL RAINFALL =    2.80, TOTAL LOSS =    2.15, TOTAL EXCESS =    0.65

  PEAK FLOW     TIME                          MAXIMUM AVERAGE FLOW
                                      6-HR       24-HR       72-HR     29.90-HR
+   (CFS)       (HR)
                          (CFS)
+       3.     12.30                    0.          0.          0.          0.
                        (INCHES)     0.533       0.654       0.654       0.654
                         (AC-FT)        0.          0.          0.          0.

                        CUMULATIVE AREA =    0.01 SQ MI

      ***             ***             ***             ***             ***

                         HYDROGRAPH AT STATION   SITE-5
                           FOR PLAN 1, RATIO = 3.50

    TOTAL RAINFALL =    3.50, TOTAL LOSS =    2.40, TOTAL EXCESS =    1.10

  PEAK FLOW     TIME                          MAXIMUM AVERAGE FLOW
                                      6-HR       24-HR       72-HR     29.90-HR
+   (CFS)       (HR)
                          (CFS)
+       5.     12.30                    1.          0.          0.          0.
                        (INCHES)     0.921       1.105       1.105       1.105
                         (AC-FT)        0.          1.          1.          1.

                        CUMULATIVE AREA =    0.01 SQ MI

      ***             ***             ***             ***             ***

                         HYDROGRAPH AT STATION   SITE-5
                           FOR PLAN 1, RATIO = 4.50

    TOTAL RAINFALL =    4.50, TOTAL LOSS =    2.66, TOTAL EXCESS =    1.84

  PEAK FLOW     TIME                          MAXIMUM AVERAGE FLOW
                                      6-HR       24-HR       72-HR     29.90-HR
+   (CFS)       (HR)
                          (CFS)
+       9.     12.30                    1.          0.          0.          0.
                        (INCHES)     1.543       1.840       1.840       1.840
                         (AC-FT)        1.          1.          1.          1.

                        CUMULATIVE AREA =    0.01 SQ MI

      ***             ***             ***             ***             ***

                         HYDROGRAPH AT STATION   SITE-5
                           FOR PLAN 1, RATIO = 5.10

    TOTAL RAINFALL =    5.10, TOTAL LOSS =    2.78, TOTAL EXCESS =    2.32

  PEAK FLOW     TIME                          MAXIMUM AVERAGE FLOW
                                      6-HR       24-HR       72-HR     29.90-HR
+   (CFS)       (HR)
                          (CFS)
+      12.     12.30                    2.          1.          0.          0.
                        (INCHES)     1.941       2.316       2.316       2.316
                         (AC-FT)        1.          1.          1.          1.

                        CUMULATIVE AREA =    0.01 SQ MI
```

```
      ***             ***             ***             ***             ***

                        HYDROGRAPH AT STATION   SITE-5
                          FOR PLAN 1, RATIO = 6.00

    TOTAL RAINFALL =    6.00, TOTAL LOSS =    2.94, TOTAL EXCESS =    3.06

  PEAK FLOW     TIME                          MAXIMUM AVERAGE FLOW
                                    6-HR        24-HR        72-HR     29.90-HR
+   (CFS)        (HR)
                  (CFS)
+      15.     12.20                 2.           1.           1.           1.
                (INCHES)      2.562        3.065        3.065        3.065
                 (AC-FT)        1.           1.           1.           1.

                CUMULATIVE AREA =    0.01 SQ MI


      ***             ***             ***             ***             ***

                        HYDROGRAPH AT STATION   SITE-5
                          FOR PLAN 1, RATIO = 9.00

    TOTAL RAINFALL =    9.00, TOTAL LOSS =    3.26, TOTAL EXCESS =    5.74

  PEAK FLOW     TIME                          MAXIMUM AVERAGE FLOW
                                    6-HR        24-HR        72-HR     29.90-HR
+   (CFS)        (HR)
                  (CFS)
+      29.     12.20                 4.           1.           1.           1.
                (INCHES)      4.721        5.736        5.736        5.736
                 (AC-FT)        2.           3.           3.           3.

                CUMULATIVE AREA =    0.01 SQ MI


*** *** *** *** *** *** *** *** *** *** *** *** *** *** *** *** *** *** *** *** *** *** *** *** *** *** *** *** *** *** *** *** *** *** ***


          **************
          *            *
 117 KK   *     OFF-2  *     OFFSITE EASTERLY RUNOFF TOWARD PT.4
          *            *
          **************

                    ********************************************************************
                    * DRAINAGE AREA = 3.32 AC = 0.0052 SQ. MI.      CN=78              *
                    * TIME OF CONCENTRATION = 10 MIN = 0.167 HR x 0.6 (SCS LAG) = 0.100  *
                    ********************************************************************


             SUBBASIN RUNOFF DATA

 124 BA        SUBBASIN CHARACTERISTICS
                    TAREA         0.01  SUBBASIN AREA

             PRECIPITATION DATA

  35 PB             STORM         1.00  BASIN TOTAL PRECIPITATION

  37 PI          INCREMENTAL PRECIPITATION PATTERN
                   0.00      0.00      0.00      0.00      0.00      0.00      0.00      0.00      0.00      0.00
                   0.00      0.00      0.00      0.00      0.00      0.00      0.00      0.00      0.00      0.00
                   0.00      0.00      0.00      0.00      0.00      0.00      0.00      0.00      0.00      0.00
                   0.00      0.00      0.00      0.00      0.00      0.00      0.00      0.00      0.00      0.00
                   0.00      0.00      0.00      0.00      0.00      0.00      0.00      0.00      0.00      0.00
                   0.00      0.00      0.00      0.00      0.00      0.00      0.00      0.00      0.00      0.00
                   0.00      0.00      0.00      0.00      0.00      0.00      0.00      0.00      0.00      0.00
                   0.00      0.00      0.00      0.00      0.00      0.00      0.00      0.00      0.00      0.00
                   0.00      0.00      0.00      0.00      0.00      0.00      0.00      0.00      0.00      0.00
                   0.00      0.00      0.00      0.00      0.00      0.00      0.00      0.00      0.00      0.00
                   0.00      0.01      0.00      0.01      0.00      0.01      0.01      0.01      0.01      0.01
                   0.01      0.01      0.01      0.01      0.01      0.01      0.01      0.02      0.03      0.05
                   0.08      0.08      0.05      0.03      0.02      0.01      0.01      0.01      0.01      0.01
                   0.01      0.01      0.01      0.01      0.01      0.01      0.00      0.01      0.00      0.00
                   0.00      0.00      0.00      0.00      0.00      0.00      0.00      0.00      0.00      0.00
                   0.00      0.00      0.00      0.00      0.00      0.00      0.00      0.00      0.00      0.01
                   0.00      0.00      0.00      0.00      0.00      0.00      0.00      0.00      0.00      0.00
                   0.00      0.00      0.00      0.00      0.00      0.00      0.00      0.00      0.00      0.00
                   0.00      0.00      0.00      0.00      0.00      0.00      0.00      0.00      0.00      0.00
                   0.00      0.00      0.00      0.00      0.00      0.00      0.00      0.00      0.00      0.00
                   0.00      0.00      0.00      0.00      0.00      0.00      0.00      0.00      0.00      0.00
                   0.00      0.00      0.00      0.00      0.00      0.00      0.00      0.00      0.00      0.00
                   0.00      0.00      0.00      0.00      0.00      0.00      0.00      0.00      0.00      0.00
                   0.00      0.00      0.00      0.00      0.00      0.00      0.00      0.00      0.00

 125 LS        SCS LOSS RATE
                    STRTL         1.00  INITIAL ABSTRACTION
                   CRVNBR        78.00  CURVE NUMBER
                    RTIMP         0.00  PERCENT IMPERVIOUS AREA

 126 UD        SCS DIMENSIONLESS UNITGRAPH
                    TLAG          0.10  LAG
```

***

UNIT HYDROGRAPH
7 END-OF-PERIOD ORDINATES

13. 14. 5. 2. 1. 0. 0.

TOTAL RAINFALL = 1.00, TOTAL LOSS = 1.00, TOTAL EXCESS = 0.00

| PEAK FLOW | TIME | MAXIMUM AVERAGE FLOW | | | |
|---|---|---|---|---|---|
| | | 6-HR | 24-HR | 72-HR | 29.90-HR |
| (CFS) | (HR) | | | | |
| | | (CFS) | | | |
| 0. | 0.10 | 0. | 0. | 0. | 0. |
| | | (INCHES) 0.000 | 0.000 | 0.000 | 0.000 |
| | | (AC-FT) 0. | 0. | 0. | 0. |

CUMULATIVE AREA = 0.01 SQ MI

*** *** *** *** ***

HYDROGRAPH AT STATION OFF-2
FOR PLAN 1, RATIO = 2.80

TOTAL RAINFALL = 2.80, TOTAL LOSS = 2.10, TOTAL EXCESS = 0.70

| PEAK FLOW | TIME | MAXIMUM AVERAGE FLOW | | | |
|---|---|---|---|---|---|
| | | 6-HR | 24-HR | 72-HR | 29.90-HR |
| (CFS) | (HR) | | | | |
| | | (CFS) | | | |
| 2. | 12.30 | 0. | 0. | 0. | 0. |
| | | (INCHES) 0.574 | 0.701 | 0.701 | 0.701 |
| | | (AC-FT) 0. | 0. | 0. | 0. |

CUMULATIVE AREA = 0.01 SQ MI

*** *** *** *** ***

HYDROGRAPH AT STATION OFF-2
FOR PLAN 1, RATIO = 3.50

TOTAL RAINFALL = 3.50, TOTAL LOSS = 2.33, TOTAL EXCESS = 1.17

| PEAK FLOW | TIME | MAXIMUM AVERAGE FLOW | | | |
|---|---|---|---|---|---|
| | | 6-HR | 24-HR | 72-HR | 29.90-HR |
| (CFS) | (HR) | | | | |
| | | (CFS) | | | |
| 3. | 12.30 | 1. | 0. | 0. | 0. |
| | | (INCHES) 0.982 | 1.175 | 1.175 | 1.175 |
| | | (AC-FT) 0. | 0. | 0. | 0. |

CUMULATIVE AREA = 0.01 SQ MI

*** *** *** *** ***

HYDROGRAPH AT STATION OFF-2
FOR PLAN 1, RATIO = 4.50

TOTAL RAINFALL = 4.50, TOTAL LOSS = 2.56, TOTAL EXCESS = 1.94

| PEAK FLOW | TIME | MAXIMUM AVERAGE FLOW | | | |
|---|---|---|---|---|---|
| | | 6-HR | 24-HR | 72-HR | 29.90-HR |
| (CFS) | (HR) | | | | |
| | | (CFS) | | | |
| 6. | 12.30 | 1. | 0. | 0. | 0. |
| | | (INCHES) 1.630 | 1.938 | 1.938 | 1.938 |
| | | (AC-FT) 0. | 1. | 1. | 1. |

CUMULATIVE AREA = 0.01 SQ MI

*** *** *** *** ***

HYDROGRAPH AT STATION OFF-2
FOR PLAN 1, RATIO = 5.10

TOTAL RAINFALL = 5.10, TOTAL LOSS = 2.67, TOTAL EXCESS = 2.43

| PEAK FLOW | TIME | MAXIMUM AVERAGE FLOW | | | |
|---|---|---|---|---|---|
| | | 6-HR | 24-HR | 72-HR | 29.90-HR |
| (CFS) | (HR) | | | | |
| | | (CFS) | | | |
| 7. | 12.30 | 1. | 0. | 0. | 0. |
| | | (INCHES) 2.040 | 2.429 | 2.429 | 2.429 |
| | | (AC-FT) 1. | 1. | 1. | 1. |

CUMULATIVE AREA = 0.01 SQ MI

*** *** *** *** ***

HYDROGRAPH AT STATION OFF-2

FOR PLAN 1, RATIO = 6.00

TOTAL RAINFALL = 6.00, TOTAL LOSS = 2.80, TOTAL EXCESS = 3.20

| PEAK FLOW | TIME | | MAXIMUM AVERAGE FLOW | | | |
|---|---|---|---|---|---|---|
| | | | 6-HR | 24-HR | 72-HR | 29.90-HR |
| + (CFS) | (HR) | | | | | |
| | | (CFS) | | | | |
| + 10. | 12.20 | | 1. | 0. | 0. | 0. |
| | | (INCHES) | 2.678 | 3.197 | 3.197 | 3.197 |
| | | (AC-FT) | 1. | 1. | 1. | 1. |

CUMULATIVE AREA = 0.01 SQ MI

*** *** *** *** ***

HYDROGRAPH AT STATION OFF-2
FOR PLAN 1, RATIO = 9.00

TOTAL RAINFALL = 9.00, TOTAL LOSS = 3.09, TOTAL EXCESS = 5.91

| PEAK FLOW | TIME | | MAXIMUM AVERAGE FLOW | | | |
|---|---|---|---|---|---|---|
| | | | 6-HR | 24-HR | 72-HR | 29.90-HR |
| + (CFS) | (HR) | | | | | |
| | | (CFS) | | | | |
| + 18. | 12.20 | | 3. | 1. | 1. | 1. |
| | | (INCHES) | 4.869 | 5.915 | 5.915 | 5.915 |
| | | (AC-FT) | 1. | 2. | 2. | 2. |

CUMULATIVE AREA = 0.01 SQ MI

*** *** *** *

*** *** *** *** ***

HYDROGRAPH AT STATION PT.4
FOR PLAN 1, RATIO = 5.10

| PEAK FLOW | TIME | MAXIMUM AVERAGE FLOW | | | |
|---|---|---|---|---|---|
| | | 6-HR | 24-HR | 72-HR | 29.90-HR |
| (CFS) | (HR) | | | | |
| | | (CFS) | | | |
| 55. | 12.30 | 8. | 2. | 2. | 2. |
| | | (INCHES) 2.344 | 2.767 | 2.767 | 2.767 |
| | | (AC-FT) 4. | 5. | 5. | 5. |

CUMULATIVE AREA = 0.03 SQ MI

*** *** *** *** ***

HYDROGRAPH AT STATION PT.4
FOR PLAN 1, RATIO = 6.00

| PEAK FLOW | TIME | MAXIMUM AVERAGE FLOW | | | |
|---|---|---|---|---|---|
| | | 6-HR | 24-HR | 72-HR | 29.90-HR |
| (CFS) | (HR) | | | | |
| | | (CFS) | | | |
| 71. | 12.30 | 11. | 3. | 3. | 3. |
| | | (INCHES) 3.004 | 3.569 | 3.569 | 3.569 |
| | | (AC-FT) 5. | 6. | 6. | 6. |

CUMULATIVE AREA = 0.03 SQ MI

*** *** *** *** ***

HYDROGRAPH AT STATION PT.4
FOR PLAN 1, RATIO = 9.00

| PEAK FLOW | TIME | MAXIMUM AVERAGE FLOW | | | |
|---|---|---|---|---|---|
| | | 6-HR | 24-HR | 72-HR | 29.90-HR |
| (CFS) | (HR) | | | | |
| | | (CFS) | | | |
| 121. | 12.30 | 19. | 6. | 5. | 5. |
| | | (INCHES) 5.213 | 6.359 | 6.359 | 6.359 |
| | | (AC-FT) 9. | 11. | 11. | 11. |

CUMULATIVE AREA = 0.03 SQ MI

1

PEAK FLOW AND STAGE (END-OF-PERIOD) SUMMARY FOR MULTIPLE PLAN-RATIO ECONOMIC COMPUTATIONS
FLOWS IN CUBIC FEET PER SECOND, AREA IN SQUARE MILES
VOLUME IN ACRE-FEET, TIME TO PEAK IN HOURS

| OPERATION | STATION | AREA | PLAN | | RATIOS APPLIED TO PRECIPITATION | | | | | |
|---|---|---|---|---|---|---|---|---|---|---|
| | | | | | RATIO 1 | RATIO 2 | RATIO 3 | RATIO 4 | RATIO 5 | RATIO 6 |
| | | | | | 2.80 | 3.50 | 4.50 | 5.10 | 6.00 | 9.00 |
| HYDROGRAPH AT | | | | | | | | | | |
| + | SITE-1 | 0.007 | 1 | FLOW | 2.28 | 4.27 | 7.30 | 9.18 | 12.14 | 22.48 |
| | | | | TIME | 12.30 | 12.30 | 12.30 | 12.30 | 12.20 | 12.20 |
| | | | | VOLUME | 0.24 | 0.41 | 0.67 | 0.84 | 1.11 | 2.05 |
| HYDROGRAPH AT | | | | | | | | | | |
| + | SITE-2 | 0.001 | 1 | FLOW | 0.25 | 0.47 | 0.78 | 0.96 | 1.23 | 2.11 |
| | | | | TIME | 12.20 | 12.20 | 12.20 | 12.20 | 12.20 | 12.20 |
| | | | | VOLUME | 0.02 | 0.04 | 0.06 | 0.07 | 0.10 | 0.17 |
| HYDROGRAPH AT | | | | | | | | | | |
| + | SITE-3 | 0.006 | 1 | FLOW | 1.97 | 3.68 | 6.29 | 7.90 | 10.45 | 19.37 |
| | | | | TIME | 12.30 | 12.30 | 12.30 | 12.30 | 12.20 | 12.20 |
| | | | | VOLUME | 0.21 | 0.35 | 0.58 | 0.73 | 0.95 | 1.77 |
| HYDROGRAPH AT | | | | | | | | | | |
| + | SITE-4 | 0.001 | 1 | FLOW | 0.37 | 0.71 | 1.27 | 1.63 | 2.19 | 4.27 |
| | | | | TIME | 12.30 | 12.30 | 12.30 | 12.30 | 12.30 | 12.20 |
| | | | | VOLUME | 0.04 | 0.07 | 0.12 | 0.15 | 0.21 | 0.40 |
| HYDROGRAPH AT | | | | | | | | | | |
| + | OFF-1 | 0.012 | 1 | FLOW | 9.62 | 15.04 | 22.65 | 26.90 | 32.99 | 52.19 |
| | | | | TIME | 12.30 | 12.30 | 12.20 | 12.20 | 12.20 | 12.20 |
| | | | | VOLUME | 0.83 | 1.26 | 1.89 | 2.27 | 2.85 | 4.80 |
| 3 COMBINED AT | | | | | | | | | | |
| + | PT.3 | 0.019 | 1 | FLOW | 11.95 | 19.43 | 29.95 | 36.30 | 45.62 | 75.83 |
| | | | | TIME | 12.30 | 12.30 | 12.20 | 12.20 | 12.20 | 12.20 |
| | | | | VOLUME | 1.08 | 1.68 | 2.59 | 3.15 | 4.01 | 6.96 |
| ROUTED TO | | | | | | | | | | |
| + | LAG-3 | 0.019 | 1 | FLOW | 11.95 | 19.43 | 29.95 | 36.30 | 45.62 | 75.83 |
| | | | | TIME | 12.40 | 12.40 | 12.30 | 12.30 | 12.30 | 12.30 |
| | | | | VOLUME | 1.08 | 1.68 | 2.59 | 3.15 | 4.01 | 6.96 |

| | | | | | | | | | | |
|---|---|---|---|---|---|---|---|---|---|---|
| HYDROGRAPH AT | | | | | | | | | | |
| + | SITE-5 | 0.009 | 1 | FLOW | 2.80 | 5.30 | 9.19 | 11.63 | 15.41 | 29.07 |
| | | | | TIME | 12.30 | 12.30 | 12.30 | 12.30 | 12.20 | 12.20 |
| | | | | VOLUME | 0.30 | 0.51 | 0.85 | 1.07 | 1.42 | 2.66 |
| HYDROGRAPH AT | | | | | | | | | | |
| + | OFF-2 | 0.005 | 1 | FLOW | 1.82 | 3.41 | 5.84 | 7.34 | 9.71 | 17.98 |
| | | | | TIME | 12.30 | 12.30 | 12.30 | 12.30 | 12.20 | 12.20 |
| | | | | VOLUME | 0.19 | 0.33 | 0.54 | 0.67 | 0.89 | 1.64 |
| 3 COMBINED AT | | | | | | | | | | |
| + | PT.4 | 0.033 | 1 | FLOW | 16.12 | 27.58 | 44.98 | 55.27 | 70.59 | 121.08 |
| | | | | TIME | 12.40 | 12.30 | 12.30 | 12.30 | 12.30 | 12.30 |
| | | | | VOLUME | 1.58 | 2.52 | 3.98 | 4.90 | 6.32 | 11.26 |

*** NORMAL END OF HEC-1 ***

```
1*****************************************
*                                       *
*   FLOOD HYDROGRAPH PACKAGE  (HEC-1)   *
*             MAY   1991                *
*           VERSION 4.0.1U              *
*     Lahey F77L-EM/32 version 5.01     *
*       Dodson & Associates, Inc.       *
*  RUN DATE  02/06/20  TIME  13:30:24   *
*****************************************
```

```
*****************************************
*                                       *
*    U.S. ARMY CORPS OF ENGINEERS       *
*    HYDROLOGIC ENGINEERING CENTER      *
*         609 SECOND STREET             *
*       DAVIS, CALIFORNIA 95616         *
*           (916) 551-1748              *
*                                       *
*****************************************
```

# OAK TREE DEVELOPMENT #SY-1385: DEVELOPED CONDITIONS HEC-1 ANALYSIS

```
X     X  XXXXXXX   XXXXX          X
X     X  X        X     X        XX
X     X  X        X                X
XXXXXXX  XXXX     X        XXXXX   X
X     X  X        X                X
X     X  X        X     X          X
X     X  XXXXXXX   XXXXX           XXX
```

THIS PROGRAM REPLACES ALL PREVIOUS VERSIONS OF HEC-1 KNOWN AS HEC1 (JAN 73), HEC1GS, HEC1DB, AND HEC1KW.

THE DEFINITIONS OF VARIABLES -RTIMP- AND -RTIOR- HAVE CHANGED FROM THOSE USED WITH THE 1973-STYLE INPUT STRUCTURE.
THE DEFINITION OF -AMSKK- ON RM-CARD WAS CHANGED WITH REVISIONS DATED 28 SEP 81. THIS IS THE FORTRAN77 VERSION
NEW OPTIONS: DAMBREAK OUTFLOW SUBMERGENCE , SINGLE EVENT DAMAGE CALCULATION, DSS:WRITE STAGE FREQUENCY,
DSS:READ TIME SERIES AT DESIRED CALCULATION INTERVAL  LOSS RATE:GREEN AND AMPT INFILTRATION
KINEMATIC WAVE: NEW FINITE DIFFERENCE ALGORITHM



```
LINE          ID.....1.....2.....3.....4.....5.....6.....7.....8.....9.....10

   1          ID                    ~~~~~~~~~~~~input file:DEV-R4.ih1~~~~~~~~~~~~
   2          ID
   3          ID       HYDROLOGY FOR: OAK TREE(SY #1385)
   4          ID                      TOWN OF HAVERSTRAW, ROCKLAND COUNTY, NEW YORK
   5          ID                      DATE: 2-6-20
   6          ID
   7          ID       ANALYSIS PREPARED BY: SPARACO & YOUNGBLOOD, PLLC
   8          ID
   9          ID  ANALYSIS PARAMETERS:
  10          ID  DEVELOPED CONDITIONS RUN
  11          ID  STORM RECURRENCE INTERVALS = 1, 2, 5, 10, 25 & 100 YEAR
  12          ID  HYDROGRAPH METHOD:           SCS
  13          ID  RAINFALL DISTRIBUTION:       SCS TYPE III
  14          ID
  15          ID  24 HOUR RAINFALL DATA:
  16          ID  1 YEAR: 2.8 INCHES
  17          ID  2 YEAR: 3.5 INCHES
  18          ID  5 YEAR: 4.5 INCHES
  19          ID  10 YEAR: 5.1 INCHES
  20          ID  25 YEAR: 6.0 INCHES
  21          ID  100 YEAR: 9.0 INCHES
  22          ID
  23          ID
              *DIAGRAM
  24          IT       6       0       0     300
  25          IO       3       0
  26          JR    PREC     2.8     3.5     4.5     5.1       6       9

  27          KK  SITE1ANORTHWESTERLY SITE DEV. ROAD AND PARK. LOT RUNOFF TOWARD PT.1
  28          KM
  29          KM  ************************************************************************
  30          KM  * DRAINAGE AREA = 0.37 AC = 0.0006 SQ. MI.      CN=95                 *
  31          KM  * TIME OF CONCENTRATION = 5 MIN = 0.083 HR x 0.6 (SCS LAG) = 0.050    *
  32          KM  ************************************************************************
  33          KM
  34          BA  0.0006
  35          PB       1
  36          IN       6
  37          PC       0   0.001   0.002   0.003   0.004   0.005   0.006   0.007   0.008   0.009
  38          PC   0.010   0.011   0.012   0.013   0.014   0.015   0.016   0.017   0.018   0.019
  39          PC   0.020   0.021   0.022   0.023   0.024   0.026   0.027   0.028   0.029   0.030
  40          PC  0.0305   0.031   0.032   0.034   0.035   0.036   0.037   0.038   0.040   0.041
  41          PC   0.042   0.043   0.045   0.046   0.047   0.049   0.050   0.051   0.053   0.054
  42          PC   0.055   0.057   0.058   0.060   0.061   0.063   0.064   0.066   0.067   0.069
  43          PC   0.070   0.072   0.074   0.075   0.077   0.079   0.080   0.082   0.084   0.085
  44          PC   0.087   0.089   0.091   0.093   0.095   0.097   0.100   0.103   0.106   0.109
  45          PC   0.112   0.115   0.118   0.121   0.124   0.127   0.130   0.134   0.137   0.140
  46          PC   0.144   0.148   0.151   0.155   0.159   0.163   0.167   0.171   0.176   0.180
  47          PC   0.185   0.189   0.194   0.199   0.205   0.210   0.216   0.222   0.228   0.235
  48          PC   0.242   0.250   0.258   0.266   0.276   0.287   0.298   0.312   0.328   0.363
  49          PC   0.416   0.500   0.584   0.638   0.673   0.689   0.702   0.714   0.725   0.734
  50          PC   0.743   0.751   0.758   0.766   0.772   0.779   0.785   0.790   0.796   0.801
  51          PC   0.806   0.811   0.816   0.821   0.825   0.829   0.834   0.838   0.842   0.845
  52          PC   0.849   0.853   0.857   0.860   0.864   0.867   0.870   0.874   0.877   0.880
  53          PC   0.886   0.889   0.892   0.895   0.898   0.900   0.903   0.906   0.908   0.910
```

```
LINE      ID.....1.....2.....3.....4.....5.....6.....7.....8.....9.....10

  54      PC   0.911   0.913   0.915   0.917   0.919   0.920   0.922   0.924   0.925   0.927
  55      PC   0.929   0.930   0.932   0.933   0.935   0.936   0.938   0.939   0.941   0.942
  56      PC   0.944   0.945   0.946   0.948   0.949   0.951   0.952   0.953   0.955   0.956
  57      PC   0.957   0.958   0.960   0.961   0.962   0.963   0.965   0.966   0.967   0.968
  58      PC   0.969   0.971   0.972   0.973   0.974   0.975   0.976   0.977   0.978   0.979
  59      PC   0.981   0.982   0.983   0.984   0.985   0.986   0.987   0.988   0.989   0.990
  60      PC   0.991   0.992   0.993   0.994   0.995   0.996   0.997   0.998   0.999   1.000
  61      LS       1      95
  62      UD    0.05

  63      KK  ROUT1AROUTING IN UNDERGROUND STORAGE SYSTEM FOR SITE-1A
  64      KM
  65      KM  OUTLET STRUCTURE DATA: 14 STORMTECH MC-4500 UNITS
  66      KM  ***************************************************************
  67      KM  *  WEIR LENGTH = 3.93' WEIR OVERFLOW AT EL.: 366.0              *
  68      KM  *  3.0-INCH DIAMETER CPv ORIFICE AT EL. 365.3                   *
  69      KM  ***************************************************************
  70      KM
  71      RS       1    ELEV  361.25
  72      SV       0   0.004  0.0153  0.0262  0.0363  0.0453   0.052  0.0573  0.0573
  73      SE  361.25     362     363     364     365     366     367     368   369.2
  74      SQ       0    0.13    0.17    0.57    2.16    4.42    7.18   10.36   13.91    17.8
  75      SE   365.3   365.7   365.9   366.1   366.3   366.5   366.7   366.9   367.1   367.3

  76      KK  SITE-1NORTHWESTERLY SITE DEV. ROAD AND TRAIL RUNOFF TOWARD PT.1
  77      KM
  78      KM  ***************************************************************************
  79      KM  * DRAINAGE AREA = 1.46 AC = 0.0023 SQ. MI.      CN=79                  *
  80      KM  * TIME OF CONCENTRATION = 5 MIN = 0.083 HR x 0.6 (SCS LAG) = 0.050     *
  81      KM  ***************************************************************************
  82      KM
  83      BA  0.0023
  84      LS       1      79
  85      UD    0.05

  86      KK    PT.1ADD SITE-1A AND SITE-1 HYDROGRAPHS
  87      HC       2

  88      KK  SITE-2SOUTHWESTERLY SITE RUNOFF TOWARD PT.1
  89      KM
  90      KM  ***************************************************************************
  91      KM  * DRAINAGE AREA = 0.22 AC = 0.0003 SQ. MI.      CN=90                  *
  92      KM  * TIME OF CONCENTRATION = 5 MIN = 0.083 HR x 0.6 (SCS LAG) = 0.050     *
  93      KM  ***************************************************************************
  94      KM
  95      BA  0.0003
  96      LS       1      90
  97      UD    0.05

  98      KK  SITE3ASOUTHEASTERLY DEVELOPED SITE RUNOFF TOWARD PT.3
  99      KM
 100      KM  ***************************************************************************
 101      KM  * DRAINAGE AREA = 2.28 AC = 0.0036 SQ. MI.      CN=93                  *
 102      KM  * TIME OF CONCENTRATION = 5 MIN = 0.083 HR x 0.6 (SCS LAG) = 0.050     *
 103      KM  ***************************************************************************
```



```
LINE      ID.....1.....2.....3.....4.....5.....6.....7.....8.....9.....10

 104      KM
 105      BA  0.0036
 106      LS       1      93
 107      UD    0.05

 108      KK  SITE-4SOUTHEASTERLY SITE RUNOFF (DETENTION AREA) TOWARD PT.3
 109      KM
 110      KM  ***************************************************************************
 111      KM  * DRAINAGE AREA = 1.90 AC = 0.0030 SQ. MI.      CN=75                  *
 112      KM  * TIME OF CONCENTRATION = 10 MIN = 0.167 HR x 0.6 (SCS LAG) = 0.100    *
 113      KM  ***************************************************************************
 114      KM
 115      BA   0.003
 116      LS       1      75
 117      UD     0.1

 118      KK  SITE5ANORTHEASTERLY DEVELOPED SITE RUNOFF TOWARD PT.5
 119      KM
 120      KM  ***************************************************************************
 121      KM  * DRAINAGE AREA = 4.26 AC = 0.0067 SQ. MI.      CN=93                  *
 122      KM  * TIME OF CONCENTRATION = 5 MIN = 0.083 HR x 0.6 (SCS LAG) = 0.050     *
 123      KM  ***************************************************************************
 124      KM
 125      BA  0.0067
 126      LS       1      93
 127      UD    0.05

 128      KK   SUB5A
 129      DT  PERC5A            0.47
 130      DI    5.91    9.48   13.86    16.3   19.84   31.08
 131      DQ    5.44    9.01   13.39   15.83   19.37   30.61
```

```
132          KK  ROUT5AROUTING IN UNDERGROUND STORAGE SYSTEM FOR SITE-5A
133          KM
134          KM  OUTLET STRUCTURE DATA: 140 STORMTECH MC-4500 UNITS
135          KM  ***************************************************************
136          KM  *  WEIR LENGTH = 4.71' WEIR OVERFLOW AT EL.: 366.3              *
137          KM  *  4.5-INCH DIAMETER CPv ORIFICE AT EL.: 364.2                  *
138          KM  ***************************************************************
139          KM
140          RS       1    ELEV     359
141          SV       0  0.0297  0.1169  0.2007  0.2788  0.3479  0.3985   0.438   0.438
142          SE     359  359.75  360.75  361.75  362.75  363.75  364.75  365.75   368.5
143          SQ       0    0.25    0.73    1.21    3.13    5.84    9.15   12.97   21.91   38.06
144          SE   364.2   364.6   366.2   366.4   366.6   366.8     367   367.2   367.6   368.2

145          KK    PT.AADD SITE-3A, SITE-4 AND SITE5A HYDROGRAPHS
146          HC       3

147          KK    SUBA
148          DT   PERCA            0.37
149          DI    3.91    6.68    10.4   15.75    35.2   57.16
150          DQ    3.54    6.31   10.03   15.38   34.83   56.79
1                                    HEC-1 INPUT                                    PAGE  4

LINE         ID.......1.......2.......3.......4.......5.......6.......7.......8.......9......10

151          KK   ROUTAROUTING IN ABOVE GROUND STORAGE SYSTEM FOR COMB-3
152          KM
153          KM  OUTLET STRUCTURE DATA:
154          KM  ***************************************************************
155          KM  *  WEIR LENGTH = 3.0' WEIR OVERFLOW AT EL.: 356.0               *
156          KM  *  3.50-INCH DIAMETER CPv ORIFICE AT EL. 351.3                  *
157          KM  *  8-INCH DIAMETER ORIFICE AT EL. 354.5                         *
158          KM  ***************************************************************
159          KM
160          RS       1    ELEV     350
161          SV       0  0.0864  0.1878  0.4544    0.79  1.3767  1.5367  1.5367
162          SE     350   350.5   351.5     353     355     357  358.25     358
163          SQ       0    0.08     0.6    1.31    2.54    3.52   29.93   37.92   50.45   65.63
164          SE   351.9   351.8   354.8     355     356   356.2     358   358.2   358.4   358.6

165          KK  SITE-3SOUTHEASTERLY UNIMPROVED SITE RUNOFF TOWARD PT.3
166          KM
167          KM  ************************************************************************
168          KM  * DRAINAGE AREA = 0.16 AC = 0.0003 SQ. MI.      CN=70                 *
169          KM  * TIME OF CONCENTRATION = 10 MIN = 0.167 HR x 0.6 (SCS LAG) = 0.100   *
170          KM  ************************************************************************
171          KM
172          BA  0.0003
173          LS       1      70
174          UD     0.1

175          KK    PT.BADD ROUTE3 AND SITE-3 HYDROGRAPHS
176          HC       2

177          KK   OFF-1OFFSITE SOUTHEASTERLY RUNOFF TOWARD PT.3
178          KM
179          KM  ************************************************************************
180          KM  * DRAINAGE AREA = 7.85 AC = 0.0123 SQ. MI.      CN=93                 *
181          KM  * TIME OF CONCENTRATION = 10 MIN = 0.167 HR x 0.6 (SCS LAG) = 0.100   *
182          KM  ************************************************************************
183          KM
184          BA  0.0123
185          LS       1      93
186          UD     0.1

187          KK    PT.3ADD PT.B AND OFF-1 HYDROGRAPHS
188          HC       2

189          KK   LAG-3LAG PT.2 COMBINED HYDROGRAPH TO PT.4
190          RT       0       0       1

191          KK  SITE-5NORTHEASTERLY UNDEVELOPED SITE RUNOFF TOWARD PT.4
192          KM
193          KM  ************************************************************************
194          KM  * DRAINAGE AREA = 3.78 AC = 0.0059 SQ. MI.      CN=73                 *
195          KM  * TIME OF CONCENTRATION = 10 MIN = 0.167 HR x 0.6 (SCS LAG) = 0.100   *
196          KM  ************************************************************************
197          KM
198          BA  0.0059
1                                    HEC-1 INPUT                                    PAGE  5

LINE         ID.......1.......2.......3.......4.......5.......6.......7.......8.......9......10

199          LS       1      73
200          UD     0.1

201          KK   OFF-2OFFSITE EASTERLY RUNOFF TOWARD PT.4
202          KM
203          KM  ************************************************************************
204          KM  * DRAINAGE AREA = 3.32 AC = 0.0052 SQ. MI.      CN=78                 *
205          KM  * TIME OF CONCENTRATION = 10 MIN = 0.167 HR x 0.6 (SCS LAG) = 0.100   *
206          KM  ************************************************************************
207          KM
208          BA  0.0052
```

```
          209          LS       1      78
          210          UD     0.1

          211          KK    PT.4ADD LAG-3, SITE-5 AND OFF-2 HYDROGRAPHS
          212          HC       3
          213          ZZ
1
                SCHEMATIC DIAGRAM OF STREAM NETWORK
 INPUT
  LINE      (V) ROUTING          (--->) DIVERSION OR PUMP FLOW

   NO.      (.) CONNECTOR        (<---) RETURN OF DIVERTED OR PUMPED FLOW

    27      SITE1A
                V
                V
    63      ROUT1A
                .
                .
    76          .      SITE-1
                .           .
                .           .
    86        PT.1............
                .
                .
    88          .      SITE-2
                .           .
                .           .
    98          .           .      SITE3A
                .           .           .
                .           .           .
   108          .           .           .      SITE-4
                .           .           .           .
                .           .           .           .
   118          .           .           .           .      SITE5A
                .           .           .           .           .
                .           .           .           .           .
   129          .           .           .           .           .-------> PERC5A
   128          .           .           .           .       SUB5A
                .           .           .           .           V
                .           .           .           .           V
   132          .           .           .           .      ROUT5A
                .           .           .           .           .
                .           .           .           .           .
   145          .           .        PT.A........................
                .           .           .
                .           .           .
   148          .           .           .-------> PERCA
   147          .           .        SUBA
                .           .           V
                .           .           V
   151          .           .       ROUTA
                .           .           .
                .           .           .
   165          .           .           .      SITE-3
                .           .           .           .
                .           .           .           .
   175          .           .        PT.B............
                .           .           .
                .           .           .
   177          .           .           .       OFF-1
                .           .           .           .
                .           .           .           .
   187          .           .        PT.3............
                .           .           V
                .           .           V
   189          .           .       LAG-3
                .           .           .
                .           .           .
   191          .           .           .      SITE-5
                .           .           .           .
                .           .           .           .
   201          .           .           .           .       OFF-2
                .           .           .           .           .
                .           .           .           .           .
   211          .           .        PT.4........................

 (***) RUNOFF ALSO COMPUTED AT THIS LOCATION
1*****************************************
 *                                       *
 *   FLOOD HYDROGRAPH PACKAGE  (HEC-1)   *
 *              MAY   1991               *
 *           VERSION 4.0.1U              *
 *    Lahey F77L-EM/32 version 5.01      *
 *      Dodson & Associates, Inc.        *
 *  RUN DATE  02/06/20  TIME  13:30:24   *
 *****************************************

 ****************************************
 *                                      *
 *    U.S. ARMY CORPS OF ENGINEERS      *
 *    HYDROLOGIC ENGINEERING CENTER     *
 *          609 SECOND STREET           *
 *       DAVIS, CALIFORNIA 95616        *
 *           (916) 551-1748             *
 *                                      *
 ****************************************
```

~~~~~~~~~~~~input file:DEV-R4.ih1~~~~~~~~~~~~~

HYDROLOGY FOR: OAK TREE(SY #1385)
~~~~~~~~~~~~

TOWN OF HAVERSTRAW, ROCKLAND COUNTY, NEW YORK
DATE: 2-6-20

ANALYSIS PREPARED BY: SPARACO & YOUNGBLOOD, PLLC

ANALYSIS PARAMETERS:
DEVELOPED CONDITIONS RUN
STORM RECURRENCE INTERVALS = 1, 2, 5, 10, 25 & 100 YEAR
HYDROGRAPH METHOD: SCS
RAINFALL DISTRIBUTION: SCS TYPE III

24 HOUR RAINFALL DATA:
1 YEAR: 2.8 INCHES
2 YEAR: 3.5 INCHES
5 YEAR: 4.5 INCHES
10 YEAR: 5.1 INCHES
25 YEAR: 6.0 INCHES
100 YEAR: 9.0 INCHES

25 IO OUTPUT CONTROL VARIABLES
IPRNT 3 PRINT CONTROL
IPLOT 0 PLOT CONTROL
QSCAL 0. HYDROGRAPH PLOT SCALE

IT HYDROGRAPH TIME DATA
NMIN 6 MINUTES IN COMPUTATION INTERVAL
IDATE 1 0 STARTING DATE
ITIME 0000 STARTING TIME
NQ 300 NUMBER OF HYDROGRAPH ORDINATES
NDDATE 2 0 ENDING DATE
NDTIME 0554 ENDING TIME
ICENT 19 CENTURY MARK

COMPUTATION INTERVAL 0.10 HOURS
TOTAL TIME BASE 29.90 HOURS

ENGLISH UNITS
DRAINAGE AREA SQUARE MILES
PRECIPITATION DEPTH INCHES
LENGTH, ELEVATION FEET
FLOW CUBIC FEET PER SECOND
STORAGE VOLUME ACRE-FEET
SURFACE AREA ACRES
TEMPERATURE DEGREES FAHRENHEIT

JP MULTI-PLAN OPTION
NPLAN 1 NUMBER OF PLANS

JR MULTI-RATIO OPTION
RATIOS OF PRECIPITATION
2.80 3.50 4.50 5.10 6.00 9.00

*** *** *** *** *** *** *** *** *** *** *** *** *** *** *** *** *** *** *** *** *** *** *** *** *** *** *** *** *** *** *** *** *** *** ***

**********
* *
27 KK * SITE1A * NORTHWESTERLY SITE DEV. ROAD AND PARK. LOT RUNOFF TOWARD PT.1
* *
**********

**********
* DRAINAGE AREA = 0.37 AC = 0.0006 SQ. MI. CN=95 *
* TIME OF CONCENTRATION = 5 MIN = 0.083 HR x 0.6 (SCS LAG) = 0.050 *
**********

36 IN TIME DATA FOR INPUT TIME SERIES
JXMIN 6 TIME INTERVAL IN MINUTES
JXDATE 1 0 STARTING DATE
JXTIME 0 STARTING TIME

SUBBASIN RUNOFF DATA

34 BA SUBBASIN CHARACTERISTICS
TAREA 0.00 SUBBASIN AREA

PRECIPITATION DATA

35 PB STORM 1.00 BASIN TOTAL PRECIPITATION

37 PI INCREMENTAL PRECIPITATION PATTERN

| | | | | | | | | | |
|---|---|---|---|---|---|---|---|---|---|
| 0.00 | 0.00 | 0.00 | 0.00 | 0.00 | 0.00 | 0.00 | 0.00 | 0.00 | 0.00 |
| 0.00 | 0.00 | 0.00 | 0.00 | 0.00 | 0.00 | 0.00 | 0.00 | 0.00 | 0.00 |
| 0.00 | 0.00 | 0.00 | 0.00 | 0.00 | 0.00 | 0.00 | 0.00 | 0.00 | 0.00 |
| 0.00 | 0.00 | 0.00 | 0.00 | 0.00 | 0.00 | 0.00 | 0.00 | 0.00 | 0.00 |
| 0.00 | 0.00 | 0.00 | 0.00 | 0.00 | 0.00 | 0.00 | 0.00 | 0.00 | 0.00 |
| 0.00 | 0.00 | 0.00 | 0.00 | 0.00 | 0.00 | 0.00 | 0.00 | 0.00 | 0.00 |
| 0.00 | 0.00 | 0.00 | 0.00 | 0.00 | 0.00 | 0.00 | 0.00 | 0.00 | 0.00 |
| 0.00 | 0.00 | 0.00 | 0.00 | 0.00 | 0.00 | 0.00 | 0.00 | 0.00 | 0.00 |
| 0.00 | 0.00 | 0.00 | 0.00 | 0.00 | 0.00 | 0.00 | 0.00 | 0.00 | 0.00 |

```
 0.00  0.00  0.00  0.00  0.00  0.00  0.00  0.00  0.00  0.00
 0.00  0.01  0.00  0.01  0.00  0.01  0.01  0.01  0.01  0.01
 0.01  0.01  0.01  0.01  0.01  0.01  0.01  0.02  0.03  0.05
 0.08  0.08  0.05  0.03  0.02  0.01  0.01  0.01  0.01  0.01
 0.01  0.01  0.01  0.01  0.01  0.01  0.00  0.01  0.00  0.00
 0.00  0.00  0.00  0.00  0.00  0.00  0.00  0.00  0.00  0.00
 0.00  0.00  0.00  0.00  0.00  0.00  0.00  0.00  0.00  0.01
 0.00  0.00  0.00  0.00  0.00  0.00  0.00  0.00  0.00  0.00
 0.00  0.00  0.00  0.00  0.00  0.00  0.00  0.00  0.00  0.00
 0.00  0.00  0.00  0.00  0.00  0.00  0.00  0.00  0.00  0.00
 0.00  0.00  0.00  0.00  0.00  0.00  0.00  0.00  0.00  0.00
 0.00  0.00  0.00  0.00  0.00  0.00  0.00  0.00  0.00  0.00
 0.00  0.00  0.00  0.00  0.00  0.00  0.00  0.00  0.00  0.00
 0.00  0.00  0.00  0.00  0.00  0.00  0.00  0.00  0.00  0.00
 0.00  0.00  0.00  0.00  0.00  0.00  0.00  0.00  0.00  0.00
 0.00  0.00  0.00  0.00  0.00  0.00  0.00  0.00  0.00
```

```
61 LS          SCS LOSS RATE
                    STRTL        1.00  INITIAL ABSTRACTION
                   CRVNBR       95.00  CURVE NUMBER
                    RTIMP        0.00  PERCENT IMPERVIOUS AREA

62 UD          SCS DIMENSIONLESS UNITGRAPH
                    TLAG        0.05  LAG

                                                                  ***

                                                          UNIT HYDROGRAPH
                                                       5 END-OF-PERIOD ORDINATES
                  3.        1.        0.        0.        0.

     TOTAL RAINFALL =    1.00, TOTAL LOSS =    1.00, TOTAL EXCESS =    0.00

   PEAK FLOW      TIME                          MAXIMUM AVERAGE FLOW
                                      6-HR       24-HR       72-HR     29.90-HR
+    (CFS)        (HR)
                    (CFS)
+       0.       0.10                0.          0.          0.          0.
                 (INCHES)       0.000       0.000       0.000       0.000
                  (AC-FT)         0.          0.          0.          0.

                  CUMULATIVE AREA =    0.00 SQ MI


       ***             ***             ***             ***             ***

                    HYDROGRAPH AT STATION   SITE1A
                      FOR PLAN 1, RATIO = 2.80

     TOTAL RAINFALL =    2.80, TOTAL LOSS =    1.41, TOTAL EXCESS =    1.39

   PEAK FLOW      TIME                          MAXIMUM AVERAGE FLOW
                                      6-HR       24-HR       72-HR     29.90-HR
+    (CFS)        (HR)
                    (CFS)
+       1.       12.20                0.          0.          0.          0.
                 (INCHES)       1.196       1.393       1.393       1.393
                  (AC-FT)         0.          0.          0.          0.

                  CUMULATIVE AREA =    0.00 SQ MI


       ***             ***             ***             ***             ***

                    HYDROGRAPH AT STATION   SITE1A
                      FOR PLAN 1, RATIO = 3.50

     TOTAL RAINFALL =    3.50, TOTAL LOSS =    1.43, TOTAL EXCESS =    2.07

   PEAK FLOW      TIME                          MAXIMUM AVERAGE FLOW
                                      6-HR       24-HR       72-HR     29.90-HR
+    (CFS)        (HR)
                    (CFS)
+       1.       12.20                0.          0.          0.          0.
                 (INCHES)       1.796       2.065       2.065       2.065
                  (AC-FT)         0.          0.          0.          0.

                  CUMULATIVE AREA =    0.00 SQ MI


       ***             ***             ***             ***             ***

                    HYDROGRAPH AT STATION   SITE1A
                      FOR PLAN 1, RATIO = 4.50

     TOTAL RAINFALL =    4.50, TOTAL LOSS =    1.46, TOTAL EXCESS =    3.04

   PEAK FLOW      TIME                          MAXIMUM AVERAGE FLOW
                                      6-HR       24-HR       72-HR     29.90-HR
+    (CFS)        (HR)
                    (CFS)
+       1.       12.20                0.          0.          0.          0.
                 (INCHES)       2.638       3.042       3.042       3.042
                  (AC-FT)         0.          0.          0.          0.

                  CUMULATIVE AREA =    0.00 SQ MI
```

```
      ***            ***            ***            ***            ***

                        HYDROGRAPH AT STATION   SITE1A
                          FOR PLAN 1, RATIO = 5.10

    TOTAL RAINFALL =    5.10, TOTAL LOSS =    1.47, TOTAL EXCESS =    3.63

  PEAK FLOW     TIME                          MAXIMUM AVERAGE FLOW
                                      6-HR       24-HR       72-HR     29.90-HR
+   (CFS)       (HR)
                          (CFS)
+       2.     12.20                    0.          0.          0.          0.
                        (INCHES)     3.133       3.634       3.634       3.634
                         (AC-FT)        0.          0.          0.          0.

                        CUMULATIVE AREA =    0.00 SQ MI

      ***            ***            ***            ***            ***

                        HYDROGRAPH AT STATION   SITE1A
                          FOR PLAN 1, RATIO = 6.00

    TOTAL RAINFALL =    6.00, TOTAL LOSS =    1.48, TOTAL EXCESS =    4.52

  PEAK FLOW     TIME                          MAXIMUM AVERAGE FLOW
                                      6-HR       24-HR       72-HR     29.90-HR
+   (CFS)       (HR)
                          (CFS)
+       2.     12.20                    0.          0.          0.          0.
                        (INCHES)     3.847       4.524       4.524       4.524
                         (AC-FT)        0.          0.          0.          0.

                        CUMULATIVE AREA =    0.00 SQ MI

      ***            ***            ***            ***            ***

                        HYDROGRAPH AT STATION   SITE1A
                          FOR PLAN 1, RATIO = 9.00

    TOTAL RAINFALL =    9.00, TOTAL LOSS =    1.49, TOTAL EXCESS =    7.51

  PEAK FLOW     TIME                          MAXIMUM AVERAGE FLOW
                                      6-HR       24-HR       72-HR     29.90-HR
+   (CFS)       (HR)
                          (CFS)
+       3.     12.20                    0.          0.          0.          0.
                        (INCHES)     6.110       7.506       7.506       7.506
                         (AC-FT)        0.          0.          0.          0.

                        CUMULATIVE AREA =    0.00 SQ MI


*** *** *** *** *** *** *** *** *** *** *** *** *** *** *** *** *** *** *** *** *** *** *** *** *** *** *** *** *** *** *** *** ***


            **************
            *            *
  63 KK     *    ROUT1A  *     ROUTING IN UNDERGROUND STORAGE SYSTEM FOR SITE-1A
            *            *
            **************

                        OUTLET STRUCTURE DATA: 14 STORMTECH MC-4500 UNITS
                        ******************************************************************
                        *  WEIR LENGTH = 3.93' WEIR OVERFLOW AT EL.: 366.0               *
                        *  3.0-INCH DIAMETER CPv ORIFICE AT EL. 365.3                    *
                        ******************************************************************


              HYDROGRAPH ROUTING DATA

  71 RS          STORAGE ROUTING
                      NSTPS           1  NUMBER OF SUBREACHES
                       ITYP        ELEV  TYPE OF INITIAL CONDITION
                     RSVRIC      361.25  INITIAL CONDITION
                          X        0.00 WORKING R AND D COEFFICIENT

  72 SV           STORAGE        0.0       0.0       0.0       0.0       0.0       0.0       0.1       0.1       0.1

  73 SE          ELEVATION     361.25    362.00    363.00    364.00    365.00    366.00    367.00    368.00    369.20

  74 SQ          DISCHARGE        0.        0.        0.        1.        2.        4.        7.       10.       14.       18.

  75 SE          ELEVATION     365.30    365.70    365.90    366.10    366.30    366.50    366.70    366.90    367.10    367.30

                                                                  ***

                                                  COMPUTED STORAGE-OUTFLOW-ELEVATION DATA
```

| | | | | | | | | | | |
|---|---|---|---|---|---|---|---|---|---|---|
| STORAGE | 0.00 | 0.00 | 0.02 | 0.03 | 0.04 | 0.04 | 0.04 | 0.04 | 0.05 | 0.05 |
| OUTFLOW | 0.00 | 0.00 | 0.00 | 0.00 | 0.00 | 0.00 | 0.13 | 0.17 | 0.37 | 0.57 |
| ELEVATION | 361.25 | 362.00 | 363.00 | 364.00 | 365.00 | 365.30 | 365.70 | 365.90 | 366.00 | 366.10 |
| | | | | | | | | | | |
| STORAGE | 0.05 | 0.05 | 0.05 | 0.05 | 0.05 | 0.05 | 0.05 | 0.06 | 0.06 | |
| OUTFLOW | 2.16 | 4.42 | 7.18 | 10.36 | 12.14 | 13.91 | 17.80 | 31.42 | 54.76 | |
| ELEVATION | 366.30 | 366.50 | 366.70 | 366.90 | 367.00 | 367.10 | 367.30 | 368.00 | 369.20 | |

*** WARNING *** MODIFIED PULS ROUTING MAY BE NUMERICALLY UNSTABLE FOR OUTFLOWS BETWEEN 0. TO 31.
THE ROUTED HYDROGRAPH SHOULD BE EXAMINED FOR OSCILLATIONS OR OUTFLOWS GREATER THAN PEAK INFLOWS.
THIS CAN BE CORRECTED BY DECREASING THE TIME INTERVAL OR INCREASING STORAGE (USE A LONGER REACH.)

*** *** *** *** ***

HYDROGRAPH AT STATION ROUT1A
FOR PLAN 1, RATIO = 2.80

| PEAK FLOW | TIME | MAXIMUM AVERAGE FLOW | | | |
|---|---|---|---|---|---|
| | | 6-HR | 24-HR | 72-HR | 29.90-HR |
| + (CFS) | (HR) | | | | |
| | | (CFS) | | | |
| + 0. | 19.40 | 0. | 0. | 0. | 0. |
| | | (INCHES) 0.172 | 0.174 | 0.174 | 0.174 |
| | | (AC-FT) 0. | 0. | 0. | 0. |

| PEAK STORAGE | TIME | MAXIMUM AVERAGE STORAGE | | | |
|---|---|---|---|---|---|
| | | 6-HR | 24-HR | 72-HR | 29.90-HR |
| + (AC-FT) | (HR) | | | | |
| 0. | 18.30 | 0. | 0. | 0. | 0. |

| PEAK STAGE | TIME | MAXIMUM AVERAGE STAGE | | | |
|---|---|---|---|---|---|
| | | 6-HR | 24-HR | 72-HR | 29.90-HR |
| + (FEET) | (HR) | | | | |
| 365.34 | 19.60 | 365.33 | 364.04 | 363.49 | 363.49 |

CUMULATIVE AREA = 0.00 SQ MI

*** *** *** *** ***

HYDROGRAPH AT STATION ROUT1A
FOR PLAN 1, RATIO = 3.50

| PEAK FLOW | TIME | MAXIMUM AVERAGE FLOW | | | |
|---|---|---|---|---|---|
| | | 6-HR | 24-HR | 72-HR | 29.90-HR |
| + (CFS) | (HR) | | | | |
| | | (CFS) | | | |
| + 0. | 13.90 | 0. | 0. | 0. | 0. |
| | | (INCHES) 0.643 | 0.846 | 0.846 | 0.846 |
| | | (AC-FT) 0. | 0. | 0. | 0. |

| PEAK STORAGE | TIME | MAXIMUM AVERAGE STORAGE | | | |
|---|---|---|---|---|---|
| | | 6-HR | 24-HR | 72-HR | 29.90-HR |
| + (AC-FT) | (HR) | | | | |
| 0. | 13.30 | 0. | 0. | 0. | 0. |

| PEAK STAGE | TIME | MAXIMUM AVERAGE STAGE | | | |
|---|---|---|---|---|---|
| | | 6-HR | 24-HR | 72-HR | 29.90-HR |
| + (FEET) | (HR) | | | | |
| 365.51 | 13.90 | 365.43 | 364.27 | 363.67 | 363.67 |

CUMULATIVE AREA = 0.00 SQ MI

*** *** *** *** ***

HYDROGRAPH AT STATION ROUT1A
FOR PLAN 1, RATIO = 4.50

| PEAK FLOW | TIME | MAXIMUM AVERAGE FLOW | | | |
|---|---|---|---|---|---|
| | | 6-HR | 24-HR | 72-HR | 29.90-HR |
| + (CFS) | (HR) | | | | |
| | | (CFS) | | | |
| + 1. | 12.50 | 0. | 0. | 0. | 0. |
| | | (INCHES) 1.495 | 1.824 | 1.824 | 1.824 |
| | | (AC-FT) 0. | 0. | 0. | 0. |

| PEAK STORAGE | TIME | MAXIMUM AVERAGE STORAGE | | | |
|---|---|---|---|---|---|
| | | 6-HR | 24-HR | 72-HR | 29.90-HR |
| + (AC-FT) | (HR) | | | | |
| 0. | 12.40 | 0. | 0. | 0. | 0. |

| PEAK STAGE | TIME | MAXIMUM AVERAGE STAGE | | | |
|---|---|---|---|---|---|
| | | 6-HR | 24-HR | 72-HR | 29.90-HR |
| + (FEET) | (HR) | | | | |
| 366.09 | 12.50 | 365.58 | 364.36 | 363.75 | 363.75 |

CUMULATIVE AREA = 0.00 SQ MI

*** *** *** *** ***

HYDROGRAPH AT STATION ROUT1A
FOR PLAN 1, RATIO = 5.10

| PEAK FLOW | TIME | | MAXIMUM AVERAGE FLOW | | | |
|---|---|---|---|---|---|---|
| | | | 6-HR | 24-HR | 72-HR | 29.90-HR |
| + (CFS) | (HR) | | | | | |
| | | (CFS) | | | | |
| + 1. | 12.30 | | 0. | 0. | 0. | 0. |
| | | (INCHES) | 2.035 | 2.415 | 2.415 | 2.415 |
| | | (AC-FT) | 0. | 0. | 0. | 0. |

| PEAK STORAGE | TIME | MAXIMUM AVERAGE STORAGE | | | |
|---|---|---|---|---|---|
| | | 6-HR | 24-HR | 72-HR | 29.90-HR |
| + (AC-FT) | (HR) | | | | |
| 0. | 12.30 | 0. | 0. | 0. | 0. |

| PEAK STAGE | TIME | MAXIMUM AVERAGE STAGE | | | |
|---|---|---|---|---|---|
| | | 6-HR | 24-HR | 72-HR | 29.90-HR |
| + (FEET) | (HR) | | | | |
| 366.16 | 12.30 | 365.62 | 364.40 | 363.78 | 363.78 |

CUMULATIVE AREA = 0.00 SQ MI

*** *** *** *** ***

HYDROGRAPH AT STATION ROUT1A
FOR PLAN 1, RATIO = 6.00

| PEAK FLOW | TIME | | MAXIMUM AVERAGE FLOW | | | |
|---|---|---|---|---|---|---|
| | | | 6-HR | 24-HR | 72-HR | 29.90-HR |
| + (CFS) | (HR) | | | | | |
| | | (CFS) | | | | |
| + 2. | 12.20 | | 0. | 0. | 0. | 0. |
| | | (INCHES) | 2.847 | 3.305 | 3.305 | 3.305 |
| | | (AC-FT) | 0. | 0. | 0. | 0. |

| PEAK STORAGE | TIME | MAXIMUM AVERAGE STORAGE | | | |
|---|---|---|---|---|---|
| | | 6-HR | 24-HR | 72-HR | 29.90-HR |
| + (AC-FT) | (HR) | | | | |
| 0. | 12.20 | 0. | 0. | 0. | 0. |

| PEAK STAGE | TIME | MAXIMUM AVERAGE STAGE | | | |
|---|---|---|---|---|---|
| | | 6-HR | 24-HR | 72-HR | 29.90-HR |
| + (FEET) | (HR) | | | | |
| 366.24 | 12.20 | 365.67 | 364.47 | 363.83 | 363.83 |

CUMULATIVE AREA = 0.00 SQ MI

*** *** *** *** ***

HYDROGRAPH AT STATION ROUT1A
FOR PLAN 1, RATIO = 9.00

| PEAK FLOW | TIME | | MAXIMUM AVERAGE FLOW | | | |
|---|---|---|---|---|---|---|
| | | | 6-HR | 24-HR | 72-HR | 29.90-HR |
| + (CFS) | (HR) | | | | | |
| | | (CFS) | | | | |
| + 3. | 12.20 | | 0. | 0. | 0. | 0. |
| | | (INCHES) | 5.525 | 6.287 | 6.287 | 6.287 |
| | | (AC-FT) | 0. | 0. | 0. | 0. |

| PEAK STORAGE | TIME | MAXIMUM AVERAGE STORAGE | | | |
|---|---|---|---|---|---|
| | | 6-HR | 24-HR | 72-HR | 29.90-HR |
| + (AC-FT) | (HR) | | | | |
| 0. | 12.10 | 0. | 0. | 0. | 0. |

| PEAK STAGE | TIME | MAXIMUM AVERAGE STAGE | | | |
|---|---|---|---|---|---|
| | | 6-HR | 24-HR | 72-HR | 29.90-HR |
| + (FEET) | (HR) | | | | |
| 366.36 | 12.20 | 365.83 | 364.72 | 364.03 | 364.03 |

CUMULATIVE AREA = 0.00 SQ MI

*** *** *** *

PRECIPITATION DATA

35 PB STORM 1.00 BASIN TOTAL PRECIPITATION

37 PI INCREMENTAL PRECIPITATION PATTERN

| | | | | | | | | | |
|---|---|---|---|---|---|---|---|---|---|
| 0.00 | 0.00 | 0.00 | 0.00 | 0.00 | 0.00 | 0.00 | 0.00 | 0.00 | 0.00 |

HYDROGRAPH AT STATION SITE-1
FOR PLAN 1, RATIO = 4.50

TOTAL RAINFALL = 4.50, TOTAL LOSS = 2.51, TOTAL EXCESS = 1.99

| PEAK FLOW | TIME | MAXIMUM AVERAGE FLOW 6-HR | 24-HR | 72-HR | 29.90-HR |
|---|---|---|---|---|---|
| (CFS) | (HR) | | | | |
| | | (CFS) | | | |
| 3. | 12.20 | 0. | 0. | 0. | 0. |
| | | (INCHES) 1.676 | 1.989 | 1.989 | 1.989 |
| | | (AC-FT) 0. | 0. | 0. | 0. |

CUMULATIVE AREA = 0.00 SQ MI

*** *** *** *** ***

HYDROGRAPH AT STATION SITE-1
FOR PLAN 1, RATIO = 5.10

TOTAL RAINFALL = 5.10, TOTAL LOSS = 2.61, TOTAL EXCESS = 2.49

| PEAK FLOW | TIME | MAXIMUM AVERAGE FLOW 6-HR | 24-HR | 72-HR | 29.90-HR |
|---|---|---|---|---|---|
| (CFS) | (HR) | | | | |
| | | (CFS) | | | |
| 4. | 12.20 | 1. | 0. | 0. | 0. |
| | | (INCHES) 2.092 | 2.487 | 2.487 | 2.487 |
| | | (AC-FT) 0. | 0. | 0. | 0. |

CUMULATIVE AREA = 0.00 SQ MI

*** *** *** *** ***

HYDROGRAPH AT STATION SITE-1
FOR PLAN 1, RATIO = 6.00

TOTAL RAINFALL = 6.00, TOTAL LOSS = 2.74, TOTAL EXCESS = 3.26

| PEAK FLOW | TIME | MAXIMUM AVERAGE FLOW 6-HR | 24-HR | 72-HR | 29.90-HR |
|---|---|---|---|---|---|
| (CFS) | (HR) | | | | |
| | | (CFS) | | | |
| 5. | 12.20 | 1. | 0. | 0. | 0. |
| | | (INCHES) 2.739 | 3.264 | 3.264 | 3.264 |
| | | (AC-FT) 0. | 0. | 0. | 0. |

CUMULATIVE AREA = 0.00 SQ MI

*** *** *** *** ***

HYDROGRAPH AT STATION SITE-1
FOR PLAN 1, RATIO = 9.00

TOTAL RAINFALL = 9.00, TOTAL LOSS = 3.00, TOTAL EXCESS = 6.00

| PEAK FLOW | TIME | MAXIMUM AVERAGE FLOW 6-HR | 24-HR | 72-HR | 29.90-HR |
|---|---|---|---|---|---|
| (CFS) | (HR) | | | | |
| | | (CFS) | | | |
| 9. | 12.20 | 1. | 0. | 0. | 0. |
| | | (INCHES) 4.944 | 6.005 | 6.005 | 6.005 |
| | | (AC-FT) 1. | 1. | 1. | 1. |

CUMULATIVE AREA = 0.00 SQ MI

*** *** *** *

| | | | | | | |
|---|---|---|---|---|---|---|
| | | | (CFS) | | | |
| + | 1. | 12.20 | | 0. | 0. | 0. | 0. |
| | | | (INCHES) | 0.473 | 0.612 | 0.612 | 0.612 |
| | | | (AC-FT) | 0. | 0. | 0. | 0. |

CUMULATIVE AREA = 0.00 SQ MI

*** *** *** *** ***

HYDROGRAPH AT STATION PT.1
FOR PLAN 1, RATIO = 3.50

| | PEAK FLOW | TIME | | MAXIMUM AVERAGE FLOW | | | |
|---|---|---|---|---|---|---|---|
| | | | | 6-HR | 24-HR | 72-HR | 29.90-HR |
| + | (CFS) | (HR) | | | | | |
| | | | (CFS) | | | | |
| + | 2. | 12.20 | | 0. | 0. | 0. | 0. |
| | | | (INCHES) | 0.923 | 1.136 | 1.136 | 1.136 |
| | | | (AC-FT) | 0. | 0. | 0. | 0. |

CUMULATIVE AREA = 0.00 SQ MI

*** *** *** *** ***

HYDROGRAPH AT STATION PT.1
FOR PLAN 1, RATIO = 4.50

| | PEAK FLOW | TIME | | MAXIMUM AVERAGE FLOW | | | |
|---|---|---|---|---|---|---|---|
| | | | | 6-HR | 24-HR | 72-HR | 29.90-HR |
| + | (CFS) | (HR) | | | | | |
| | | | (CFS) | | | | |
| + | 3. | 12.20 | | 1. | 0. | 0. | 0. |
| | | | (INCHES) | 1.626 | 1.955 | 1.955 | 1.955 |
| | | | (AC-FT) | 0. | 0. | 0. | 0. |

CUMULATIVE AREA = 0.00 SQ MI

*** *** *** *** ***

HYDROGRAPH AT STATION PT.1
FOR PLAN 1, RATIO = 5.10

| | PEAK FLOW | TIME | | MAXIMUM AVERAGE FLOW | | | |
|---|---|---|---|---|---|---|---|
| | | | | 6-HR | 24-HR | 72-HR | 29.90-HR |
| + | (CFS) | (HR) | | | | | |
| | | | (CFS) | | | | |
| + | 4. | 12.30 | | 1. | 0. | 0. | 0. |
| | | | (INCHES) | 2.064 | 2.472 | 2.472 | 2.472 |
| | | | (AC-FT) | 0. | 0. | 0. | 0. |

CUMULATIVE AREA = 0.00 SQ MI

*** *** *** *** ***

HYDROGRAPH AT STATION PT.1
FOR PLAN 1, RATIO = 6.00

| | PEAK FLOW | TIME | | MAXIMUM AVERAGE FLOW | | | |
|---|---|---|---|---|---|---|---|
| | | | | 6-HR | 24-HR | 72-HR | 29.90-HR |
| + | (CFS) | (HR) | | | | | |
| | | | (CFS) | | | | |
| + | 7. | 12.20 | | 1. | 0. | 0. | 0. |
| | | | (INCHES) | 2.734 | 3.273 | 3.273 | 3.273 |
| | | | (AC-FT) | 0. | 1. | 1. | 1. |

CUMULATIVE AREA = 0.00 SQ MI

*** *** *** *** ***

HYDROGRAPH AT STATION PT.1
FOR PLAN 1, RATIO = 9.00

| | PEAK FLOW | TIME | | MAXIMUM AVERAGE FLOW | | | |
|---|---|---|---|---|---|---|---|
| | | | | 6-HR | 24-HR | 72-HR | 29.90-HR |
| + | (CFS) | (HR) | | | | | |
| | | | (CFS) | | | | |
| + | 12. | 12.20 | | 2. | 0. | 0. | 0. |
| | | | (INCHES) | 5.027 | 6.063 | 6.063 | 6.063 |
| | | | (AC-FT) | 1. | 1. | 1. | 1. |

CUMULATIVE AREA = 0.00 SQ MI

*** *** *** *

```
88 KK      *    SITE-2  *      SOUTHWESTERLY SITE RUNOFF TOWARD PT.1
           *            *
           **************

                      ************************************************************************
                      * DRAINAGE AREA = 0.22 AC = 0.0003 SQ. MI.       CN=90                 *
                      * TIME OF CONCENTRATION = 5 MIN = 0.083 HR x 0.6 (SCS LAG) = 0.050     *
                      ************************************************************************


                 SUBBASIN RUNOFF DATA

95 BA              SUBBASIN CHARACTERISTICS
                        TAREA         0.00  SUBBASIN AREA

                   PRECIPITATION DATA

35 PB                   STORM         1.00  BASIN TOTAL PRECIPITATION

37 PI                INCREMENTAL PRECIPITATION PATTERN
                       0.00      0.00      0.00      0.00      0.00      0.00      0.00      0.00      0.00      0.00
                       0.00      0.00      0.00      0.00      0.00      0.00      0.00      0.00      0.00      0.00
                       0.00      0.00      0.00      0.00      0.00      0.00      0.00      0.00      0.00      0.00
                       0.00      0.00      0.00      0.00      0.00      0.00      0.00      0.00      0.00      0.00
                       0.00      0.00      0.00      0.00      0.00      0.00      0.00      0.00      0.00      0.00
                       0.00      0.00      0.00      0.00      0.00      0.00      0.00      0.00      0.00      0.00
                       0.00      0.00      0.00      0.00      0.00      0.00      0.00      0.00      0.00      0.00
                       0.00      0.00      0.00      0.00      0.00      0.00      0.00      0.00      0.00      0.00
                       0.00      0.00      0.00      0.00      0.00      0.00      0.00      0.00      0.00      0.00
                       0.00      0.00      0.00      0.00      0.00      0.00      0.00      0.00      0.00      0.00
                       0.00      0.01      0.00      0.01      0.00      0.01      0.01      0.01      0.01      0.01
                       0.01      0.01      0.01      0.01      0.01      0.01      0.01      0.02      0.03      0.05
                       0.08      0.08      0.05      0.03      0.02      0.01      0.01      0.01      0.01      0.01
                       0.01      0.01      0.01      0.01      0.01      0.01      0.00      0.01      0.00      0.00
                       0.00      0.00      0.00      0.00      0.00      0.00      0.00      0.00      0.00      0.00
                       0.00      0.00      0.00      0.00      0.00      0.00      0.00      0.00      0.00      0.01
                       0.00      0.00      0.00      0.00      0.00      0.00      0.00      0.00      0.00      0.00
                       0.00      0.00      0.00      0.00      0.00      0.00      0.00      0.00      0.00      0.00
                       0.00      0.00      0.00      0.00      0.00      0.00      0.00      0.00      0.00      0.00
                       0.00      0.00      0.00      0.00      0.00      0.00      0.00      0.00      0.00      0.00
                       0.00      0.00      0.00      0.00      0.00      0.00      0.00      0.00      0.00      0.00
                       0.00      0.00      0.00      0.00      0.00      0.00      0.00      0.00      0.00      0.00
                       0.00      0.00      0.00      0.00      0.00      0.00      0.00      0.00      0.00      0.00
                       0.00      0.00      0.00      0.00      0.00      0.00      0.00      0.00      0.00

96 LS              SCS LOSS RATE
                        STRTL         1.00  INITIAL ABSTRACTION
                       CRVNBR        90.00  CURVE NUMBER
                        RTIMP         0.00  PERCENT IMPERVIOUS AREA

97 UD              SCS DIMENSIONLESS UNITGRAPH
                        TLAG         0.05  LAG

                                                          ***

                                                      UNIT HYDROGRAPH
                                                   5 END-OF-PERIOD ORDINATES
                      1.        0.        0.        0.        0.

          TOTAL RAINFALL =     1.00, TOTAL LOSS =     1.00, TOTAL EXCESS =     0.00

        PEAK FLOW     TIME                          MAXIMUM AVERAGE FLOW
                                          6-HR        24-HR        72-HR     29.90-HR
      +   (CFS)       (HR)
                        (CFS)
      +       0.      0.10                 0.           0.           0.           0.
                      (INCHES)         0.000        0.000        0.000        0.000
                       (AC-FT)           0.           0.           0.           0.

                      CUMULATIVE AREA =     0.00 SQ MI


            ***             ***             ***             ***             ***

                        HYDROGRAPH AT STATION   SITE-2
                          FOR PLAN 1, RATIO = 2.80

          TOTAL RAINFALL =     2.80, TOTAL LOSS =     1.69, TOTAL EXCESS =     1.11

        PEAK FLOW     TIME                          MAXIMUM AVERAGE FLOW
                                          6-HR        24-HR        72-HR     29.90-HR
      +   (CFS)       (HR)
                        (CFS)
      +       0.     12.20                 0.           0.           0.           0.
                      (INCHES)         0.937        1.113        1.113        1.113
                       (AC-FT)           0.           0.           0.           0.

                      CUMULATIVE AREA =     0.00 SQ MI


            ***             ***             ***             ***             ***

                        HYDROGRAPH AT STATION   SITE-2
                          FOR PLAN 1, RATIO = 3.50
```

```
     TOTAL RAINFALL =     3.50, TOTAL LOSS =     1.77, TOTAL EXCESS =     1.73

   PEAK FLOW      TIME                          MAXIMUM AVERAGE FLOW
                                    6-HR         24-HR         72-HR      29.90-HR
+    (CFS)         (HR)
                    (CFS)
+        0.      12.20                0.            0.            0.            0.
                (INCHES)          1.484         1.731         1.731         1.731
                 (AC-FT)            0.            0.            0.            0.

                CUMULATIVE AREA =    0.00 SQ MI


       ***              ***              ***              ***              ***

                HYDROGRAPH AT STATION    SITE-2
                  FOR PLAN 1, RATIO = 4.50

     TOTAL RAINFALL =     4.50, TOTAL LOSS =     1.84, TOTAL EXCESS =     2.66

   PEAK FLOW      TIME                          MAXIMUM AVERAGE FLOW
                                    6-HR         24-HR         72-HR      29.90-HR
+    (CFS)         (HR)
                    (CFS)
+        1.      12.20                0.            0.            0.            0.
                (INCHES)          2.277         2.657         2.657         2.657
                 (AC-FT)            0.            0.            0.            0.

                CUMULATIVE AREA =    0.00 SQ MI


       ***              ***              ***              ***              ***

                HYDROGRAPH AT STATION    SITE-2
                  FOR PLAN 1, RATIO = 5.10

     TOTAL RAINFALL =     5.10, TOTAL LOSS =     1.87, TOTAL EXCESS =     3.23

   PEAK FLOW      TIME                          MAXIMUM AVERAGE FLOW
                                    6-HR         24-HR         72-HR      29.90-HR
+    (CFS)         (HR)
                    (CFS)
+        1.      12.20                0.            0.            0.            0.
                (INCHES)          2.759         3.226         3.226         3.226
                 (AC-FT)            0.            0.            0.            0.

                CUMULATIVE AREA =    0.00 SQ MI


       ***              ***              ***              ***              ***

                HYDROGRAPH AT STATION    SITE-2
                  FOR PLAN 1, RATIO = 6.00

     TOTAL RAINFALL =     6.00, TOTAL LOSS =     1.91, TOTAL EXCESS =     4.09

   PEAK FLOW      TIME                          MAXIMUM AVERAGE FLOW
                                    6-HR         24-HR         72-HR      29.90-HR
+    (CFS)         (HR)
                    (CFS)
+        1.      12.20                0.            0.            0.            0.
                (INCHES)          3.469         4.091         4.091         4.091
                 (AC-FT)            0.            0.            0.            0.

                CUMULATIVE AREA =    0.00 SQ MI


       ***              ***              ***              ***              ***

                HYDROGRAPH AT STATION    SITE-2
                  FOR PLAN 1, RATIO = 9.00

     TOTAL RAINFALL =     9.00, TOTAL LOSS =     1.98, TOTAL EXCESS =     7.02

   PEAK FLOW      TIME                          MAXIMUM AVERAGE FLOW
                                    6-HR         24-HR         72-HR      29.90-HR
+    (CFS)         (HR)
                    (CFS)
+        1.      12.20                0.            0.            0.            0.
                (INCHES)          5.769         7.024         7.024         7.024
                 (AC-FT)            0.            0.            0.            0.

                CUMULATIVE AREA =    0.00 SQ MI


*** *** *** *** *** *** *** *** *** *** *** *** *** *** *** *** *** *** *** *** *** *** *** *** *** *** *** *** *** *** *** *** *** *** ***

            **************
            *            *
   98 KK    *    SITE3A  *     SOUTHEASTERLY DEVELOPED SITE RUNOFF TOWARD PT.3
            *            *
            **************
```

```
*************************************************************************
* DRAINAGE AREA = 2.28 AC = 0.0036 SQ. MI.       CN=93                  *
* TIME OF CONCENTRATION = 5 MIN = 0.083 HR x 0.6 (SCS LAG) = 0.050      *
*************************************************************************

            SUBBASIN RUNOFF DATA

105 BA        SUBBASIN CHARACTERISTICS
                 TAREA         0.00  SUBBASIN AREA

              PRECIPITATION DATA

 35 PB             STORM         1.00  BASIN TOTAL PRECIPITATION

 37 PI           INCREMENTAL PRECIPITATION PATTERN
                  0.00  0.00  0.00  0.00  0.00  0.00  0.00  0.00  0.00  0.00
```

```
                                        6-HR        24-HR        72-HR      29.90-HR
+   (CFS)        (HR)
                  (CFS)
+       5.      12.20                      1.           0.           0.           0.
                (INCHES)      1.661        1.921        1.921        1.921
                (AC-FT)         0.           0.           0.           0.

                CUMULATIVE AREA =    0.00 SQ MI


      ***             ***             ***             ***             ***

                  HYDROGRAPH AT STATION   SITE3A
                    FOR PLAN 1, RATIO = 4.50

    TOTAL RAINFALL =    4.50, TOTAL LOSS =    1.62, TOTAL EXCESS =    2.88

  PEAK FLOW     TIME                          MAXIMUM AVERAGE FLOW
                                        6-HR        24-HR        72-HR      29.90-HR
+   (CFS)        (HR)
                  (CFS)
+       7.      12.20                      1.           0.           0.           0.
                (INCHES)      2.485        2.881        2.881        2.881
                (AC-FT)         0.           1.           1.           1.

                CUMULATIVE AREA =    0.00 SQ MI


      ***             ***             ***             ***             ***

                  HYDROGRAPH AT STATION   SITE3A
                    FOR PLAN 1, RATIO = 5.10

    TOTAL RAINFALL =    5.10, TOTAL LOSS =    1.64, TOTAL EXCESS =    3.46

  PEAK FLOW     TIME                          MAXIMUM AVERAGE FLOW
                                        6-HR        24-HR        72-HR      29.90-HR
+   (CFS)        (HR)
                  (CFS)
+       9.      12.20                      1.           0.           0.           0.
                (INCHES)      2.977        3.464        3.464        3.464
                (AC-FT)         1.           1.           1.           1.

                CUMULATIVE AREA =    0.00 SQ MI


      ***             ***             ***             ***             ***

                  HYDROGRAPH AT STATION   SITE3A
                    FOR PLAN 1, RATIO = 6.00

    TOTAL RAINFALL =    6.00, TOTAL LOSS =    1.65, TOTAL EXCESS =    4.35

  PEAK FLOW     TIME                          MAXIMUM AVERAGE FLOW
                                        6-HR        24-HR        72-HR      29.90-HR
+   (CFS)        (HR)
                  (CFS)
+      11.      12.20                      1.           0.           0.           0.
                (INCHES)      3.691        4.346        4.346        4.346
                (AC-FT)         1.           1.           1.           1.

                CUMULATIVE AREA =    0.00 SQ MI


      ***             ***             ***             ***             ***

                  HYDROGRAPH AT STATION   SITE3A
                    FOR PLAN 1, RATIO = 9.00

    TOTAL RAINFALL =    9.00, TOTAL LOSS =    1.69, TOTAL EXCESS =    7.31

  PEAK FLOW     TIME                          MAXIMUM AVERAGE FLOW
                                        6-HR        24-HR        72-HR      29.90-HR
+   (CFS)        (HR)
                  (CFS)
+      17.      12.20                      2.           1.           1.           1.
                (INCHES)      5.980        7.312        7.312        7.312
                (AC-FT)         1.           1.           1.           1.

                CUMULATIVE AREA =    0.00 SQ MI


*** *** *** *** *** *** *** *** *** *** *** *** *** *** *** *** *** *** *** *** *** *** *** *** *** *** *** *** *** *** *** *** *** *** ***


            **************
            *            *
108 KK      *    SITE-4  *     SOUTHEASTERLY SITE RUNOFF (DETENTION AREA) TOWARD PT.3
            *            *
            **************

                        ************************************************************************
                        * DRAINAGE AREA = 1.90 AC = 0.0030 SQ. MI.      CN=75                  *
```

```
                    * TIME OF CONCENTRATION = 10 MIN = 0.167 HR x 0.6 (SCS LAG) = 0.100   *
                    ************************************************************************

              SUBBASIN RUNOFF DATA

 115 BA         SUBBASIN CHARACTERISTICS
                     TAREA         0.00  SUBBASIN AREA

              PRECIPITATION DATA

 35 PB               STORM         1.00  BASIN TOTAL PRECIPITATION

 37 PI           INCREMENTAL PRECIPITATION PATTERN
                   0.00    0.00    0.00    0.00    0.00    0.00    0.00    0.00    0.00    0.00
                   0.00    0.00    0.00    0.00    0.00    0.00    0.00    0.00    0.00    0.00
                   0.00    0.00    0.00    0.00    0.00    0.00    0.00    0.00    0.00    0.00
                   0.00    0.00    0.00    0.00    0.00    0.00    0.00    0.00    0.00    0.00
                   0.00    0.00    0.00    0.00    0.00    0.00    0.00    0.00    0.00    0.00
                   0.00    0.00    0.00    0.00    0.00    0.00    0.00    0.00    0.00    0.00
                   0.00    0.00    0.00    0.00    0.00    0.00    0.00    0.00    0.00    0.00
                   0.00    0.00    0.00    0.00    0.00    0.00    0.00    0.00    0.00    0.00
                   0.00    0.00    0.00    0.00    0.00    0.00    0.00    0.00    0.00    0.00
                   0.00    0.00    0.00    0.00    0.00    0.00    0.00    0.00    0.00    0.00
                   0.00    0.01    0.00    0.01    0.00    0.01    0.01    0.01    0.01    0.01
                   0.01    0.01    0.01    0.01    0.01    0.01    0.01    0.02    0.03    0.05
                   0.08    0.08    0.05    0.03    0.02    0.01    0.01    0.01    0.01    0.01
                   0.01    0.01    0.01    0.01    0.01    0.01    0.00    0.01    0.00    0.00
                   0.00    0.00    0.00    0.00    0.00    0.00    0.00    0.00    0.00    0.00
                   0.00    0.00    0.00    0.00    0.00    0.00    0.00    0.00    0.00    0.01
                   0.00    0.00    0.00    0.00    0.00    0.00    0.00    0.00    0.00    0.00
                   0.00    0.00    0.00    0.00    0.00    0.00    0.00    0.00    0.00    0.00
                   0.00    0.00    0.00    0.00    0.00    0.00    0.00    0.00    0.00    0.00
                   0.00    0.00    0.00    0.00    0.00    0.00    0.00    0.00    0.00    0.00
                   0.00    0.00    0.00    0.00    0.00    0.00    0.00    0.00    0.00    0.00
                   0.00    0.00    0.00    0.00    0.00    0.00    0.00    0.00    0.00    0.00
                   0.00    0.00    0.00    0.00    0.00    0.00    0.00    0.00    0.00    0.00
                   0.00    0.00    0.00    0.00    0.00    0.00    0.00    0.00    0.00

 116 LS          SCS LOSS RATE
                     STRTL         1.00  INITIAL ABSTRACTION
                    CRVNBR        75.00  CURVE NUMBER
                     RTIMP         0.00  PERCENT IMPERVIOUS AREA

 117 UD          SCS DIMENSIONLESS UNITGRAPH
                     TLAG         0.10  LAG

                                                                  ***

                                                          UNIT HYDROGRAPH
                                                      7 END-OF-PERIOD ORDINATES
                      7.        8.        3.        1.        0.        0.        0.

    TOTAL RAINFALL =    1.00, TOTAL LOSS =    1.00, TOTAL EXCESS =    0.00

  PEAK FLOW     TIME                          MAXIMUM AVERAGE FLOW
                                    6-HR       24-HR       72-HR     29.90-HR
+   (CFS)       (HR)
                      (CFS)
+       0.      0.10                   0.          0.          0.          0.
                   (INCHES)       0.000       0.000       0.000       0.000
                    (AC-FT)          0.          0.          0.          0.

                    CUMULATIVE AREA =    0.00 SQ MI

       ***             ***             ***             ***             ***

                    HYDROGRAPH AT STATION   SITE-4
                      FOR PLAN 1, RATIO = 2.80

    TOTAL RAINFALL =    2.80, TOTAL LOSS =    2.17, TOTAL EXCESS =    0.63

  PEAK FLOW     TIME                          MAXIMUM AVERAGE FLOW
                                    6-HR       24-HR       72-HR     29.90-HR
+   (CFS)       (HR)
                      (CFS)
+       1.      12.30                  0.          0.          0.          0.
                   (INCHES)       0.514       0.631       0.631       0.631
                    (AC-FT)          0.          0.          0.          0.

                    CUMULATIVE AREA =    0.00 SQ MI

       ***             ***             ***             ***             ***

                    HYDROGRAPH AT STATION   SITE-4
                      FOR PLAN 1, RATIO = 3.50

    TOTAL RAINFALL =    3.50, TOTAL LOSS =    2.43, TOTAL EXCESS =    1.07

  PEAK FLOW     TIME                          MAXIMUM AVERAGE FLOW
                                    6-HR       24-HR       72-HR     29.90-HR
+   (CFS)       (HR)
                      (CFS)
```

```
+       2.     12.30                    0.          0.          0.          0.
                          (INCHES)    0.892       1.071       1.071       1.071
                           (AC-FT)      0.          0.          0.          0.

                          CUMULATIVE AREA =    0.00 SQ MI


      ***            ***            ***            ***            ***

                           HYDROGRAPH AT STATION   SITE-4
                             FOR PLAN 1, RATIO = 4.50

    TOTAL RAINFALL =    4.50, TOTAL LOSS =    2.71, TOTAL EXCESS =    1.79

  PEAK FLOW     TIME                          MAXIMUM AVERAGE FLOW
                                      6-HR       24-HR       72-HR     29.90-HR
+   (CFS)       (HR)
                            (CFS)
+       3.     12.30                    0.          0.          0.          0.
                          (INCHES)    1.502       1.793       1.793       1.793
                           (AC-FT)      0.          0.          0.          0.

                          CUMULATIVE AREA =    0.00 SQ MI


      ***            ***            ***            ***            ***

                           HYDROGRAPH AT STATION   SITE-4
                             FOR PLAN 1, RATIO = 5.10

    TOTAL RAINFALL =    5.10, TOTAL LOSS =    2.84, TOTAL EXCESS =    2.26

  PEAK FLOW     TIME                          MAXIMUM AVERAGE FLOW
                                      6-HR       24-HR       72-HR     29.90-HR
+   (CFS)       (HR)
                            (CFS)
+       4.     12.30                    1.          0.          0.          0.
                          (INCHES)    1.893       2.261       2.261       2.261
                           (AC-FT)      0.          0.          0.          0.

                          CUMULATIVE AREA =    0.00 SQ MI


      ***            ***            ***            ***            ***

                           HYDROGRAPH AT STATION   SITE-4
                             FOR PLAN 1, RATIO = 6.00

    TOTAL RAINFALL =    6.00, TOTAL LOSS =    3.00, TOTAL EXCESS =    3.00

  PEAK FLOW     TIME                          MAXIMUM AVERAGE FLOW
                                      6-HR       24-HR       72-HR     29.90-HR
+   (CFS)       (HR)
                            (CFS)
+       5.     12.20                    1.          0.          0.          0.
                          (INCHES)    2.505       3.000       3.000       3.000
                           (AC-FT)      0.          0.          0.          0.

                          CUMULATIVE AREA =    0.00 SQ MI


      ***            ***            ***            ***            ***

                           HYDROGRAPH AT STATION   SITE-4
                             FOR PLAN 1, RATIO = 9.00

    TOTAL RAINFALL =    9.00, TOTAL LOSS =    3.35, TOTAL EXCESS =    5.65

  PEAK FLOW     TIME                          MAXIMUM AVERAGE FLOW
                                      6-HR       24-HR       72-HR     29.90-HR
+   (CFS)       (HR)
                            (CFS)
+      10.     12.20                    1.          0.          0.          0.
                          (INCHES)    4.647       5.647       5.647       5.647
                           (AC-FT)      1.          1.          1.          1.

                          CUMULATIVE AREA =    0.00 SQ MI


*** *** *** *** *** *** *** *** *** *** *** *** *** *** *** *** *** *** *** *** *** *** *** *** *** *** *** *** *** *** *** *** ***

            **************
            *            *
 118 KK     *    SITE5A  *     NORTHEASTERLY DEVELOPED SITE RUNOFF TOWARD PT.5
            *            *
            **************

                          ************************************************************************
                          * DRAINAGE AREA = 4.26 AC = 0.0067 SQ. MI.      CN=93                  *
                          * TIME OF CONCENTRATION = 5 MIN = 0.083 HR x 0.6 (SCS LAG) = 0.050     *
                          ************************************************************************
```

```
                SUBBASIN RUNOFF DATA

  125 BA          SUBBASIN CHARACTERISTICS
                       TAREA         0.01  SUBBASIN AREA

                  PRECIPITATION DATA

   35 PB                STORM         1.00  BASIN TOTAL PRECIPITATION

   37 PI            INCREMENTAL PRECIPITATION PATTERN
                     0.00      0.00      0.00      0.00      0.00      0.00      0.00      0.00      0.00      0.00
```

```
                    CUMULATIVE AREA =    0.01 SQ MI

      ***           ***           ***           ***           ***

                    HYDROGRAPH AT STATION   SITE5A
                      FOR PLAN 1, RATIO = 4.50

    TOTAL RAINFALL =    4.50, TOTAL LOSS =    1.62, TOTAL EXCESS =    2.88

  PEAK FLOW     TIME                        MAXIMUM AVERAGE FLOW
                                  6-HR       24-HR       72-HR     29.90-HR
+   (CFS)       (HR)
                  (CFS)
+      14.     12.20                 2.          1.          0.          0.
                (INCHES)      2.485       2.881       2.881       2.881
                (AC-FT)         1.          1.          1.          1.

                    CUMULATIVE AREA =    0.01 SQ MI

      ***           ***           ***           ***           ***

                    HYDROGRAPH AT STATION   SITE5A
                      FOR PLAN 1, RATIO = 5.10

    TOTAL RAINFALL =    5.10, TOTAL LOSS =    1.64, TOTAL EXCESS =    3.46

  PEAK FLOW     TIME                        MAXIMUM AVERAGE FLOW
                                  6-HR       24-HR       72-HR     29.90-HR
+   (CFS)       (HR)
                  (CFS)
+      16.     12.20                 2.          1.          1.          1.
                (INCHES)      2.977       3.464       3.464       3.464
                (AC-FT)         1.          1.          1.          1.

                    CUMULATIVE AREA =    0.01 SQ MI

      ***           ***           ***           ***           ***

                    HYDROGRAPH AT STATION   SITE5A
                      FOR PLAN 1, RATIO = 6.00

    TOTAL RAINFALL =    6.00, TOTAL LOSS =    1.65, TOTAL EXCESS =    4.35

  PEAK FLOW     TIME                        MAXIMUM AVERAGE FLOW
                                  6-HR       24-HR       72-HR     29.90-HR
+   (CFS)       (HR)
                  (CFS)
+      20.     12.20                 3.          1.          1.          1.
                (INCHES)      3.691       4.346       4.346       4.346
                (AC-FT)         1.          2.          2.          2.

                    CUMULATIVE AREA =    0.01 SQ MI

      ***           ***           ***           ***           ***

                    HYDROGRAPH AT STATION   SITE5A
                      FOR PLAN 1, RATIO = 9.00

    TOTAL RAINFALL =    9.00, TOTAL LOSS =    1.69, TOTAL EXCESS =    7.31

  PEAK FLOW     TIME                        MAXIMUM AVERAGE FLOW
                                  6-HR       24-HR       72-HR     29.90-HR
+   (CFS)       (HR)
                  (CFS)
+      31.     12.20                 4.          1.          1.          1.
                (INCHES)      5.980       7.312       7.312       7.312
                (AC-FT)         2.          3.          3.          3.

                    CUMULATIVE AREA =    0.01 SQ MI

*** *** *** *** *** *** *** *** *** *** *** *** *** *** *** *** *** *** *** *** *** *** *** *** *** *** *** *** *** *** *** *** *** *** ***

            **************
            *            *
128 KK      *     SUB5A  *
            *            *
            **************

     DT          DIVERSION
                      ISTAD      PERC5A  DIVERSION HYDROGRAPH IDENTIFICATION

     DI             INFLOW        5.91       9.48      13.86      16.30      19.84      31.08

     DQ      DIVERTED FLOW        5.44       9.01      13.39      15.83      19.37      30.61

                                                                    ***
```

*** *** *** *** ***

DIVERSION HYDROGRAPH PERC5A
FOR PLAN 1, RATIO = 2.80

| PEAK FLOW | TIME | MAXIMUM AVERAGE FLOW | | | |
|---|---|---|---|---|---|
| | | 6-HR | 24-HR | 72-HR | 29.90-HR |
| (CFS) | (HR) | | | | |
| | | (CFS) | | | |
| 0. | 12.00 | 0. | 0. | 0. | 0. |
| | | (INCHES) 0.520 | 0.709 | 0.709 | 0.709 |
| | | (AC-FT) 0. | 0. | 0. | 0. |

CUMULATIVE AREA = 0.01 SQ MI

*** *** *** *** ***

HYDROGRAPH AT STATION SUB5A
FOR PLAN 1, RATIO = 2.80

| PEAK FLOW | TIME | MAXIMUM AVERAGE FLOW | | | |
|---|---|---|---|---|---|
| | | 6-HR | 24-HR | 72-HR | 29.90-HR |
| (CFS) | (HR) | | | | |
| | | (CFS) | | | |
| 5. | 12.20 | 0. | 0. | 0. | 0. |
| | | (INCHES) 0.560 | 0.560 | 0.560 | 0.560 |
| | | (AC-FT) 0. | 0. | 0. | 0. |

CUMULATIVE AREA = 0.01 SQ MI

*** *** *** *** ***

DIVERSION HYDROGRAPH PERC5A
FOR PLAN 1, RATIO = 3.50

| PEAK FLOW | TIME | MAXIMUM AVERAGE FLOW | | | |
|---|---|---|---|---|---|
| | | 6-HR | 24-HR | 72-HR | 29.90-HR |
| (CFS) | (HR) | | | | |
| | | (CFS) | | | |
| 0. | 11.80 | 0. | 0. | 0. | 0. |
| | | (INCHES) 0.591 | 0.851 | 0.851 | 0.851 |
| | | (AC-FT) 0. | 0. | 0. | 0. |

CUMULATIVE AREA = 0.01 SQ MI

*** *** *** *** ***

HYDROGRAPH AT STATION SUB5A
FOR PLAN 1, RATIO = 3.50

| PEAK FLOW | TIME | MAXIMUM AVERAGE FLOW | | | |
|---|---|---|---|---|---|
| | | 6-HR | 24-HR | 72-HR | 29.90-HR |
| (CFS) | (HR) | | | | |
| | | (CFS) | | | |
| 9. | 12.20 | 1. | 0. | 0. | 0. |
| | | (INCHES) 1.070 | 1.070 | 1.070 | 1.070 |
| | | (AC-FT) 0. | 0. | 0. | 0. |

CUMULATIVE AREA = 0.01 SQ MI

*** *** *** *** ***

DIVERSION HYDROGRAPH PERC5A
FOR PLAN 1, RATIO = 4.50

| PEAK FLOW | TIME | MAXIMUM AVERAGE FLOW | | | |
|---|---|---|---|---|---|
| | | 6-HR | 24-HR | 72-HR | 29.90-HR |
| (CFS) | (HR) | | | | |
| | | (CFS) | | | |
| 0. | 11.30 | 0. | 0. | 0. | 0. |
| | | (INCHES) 0.638 | 1.034 | 1.034 | 1.034 |
| | | (AC-FT) 0. | 0. | 0. | 0. |

CUMULATIVE AREA = 0.01 SQ MI

*** *** *** *** ***

HYDROGRAPH AT STATION SUB5A
FOR PLAN 1, RATIO = 4.50

| PEAK FLOW | TIME | MAXIMUM AVERAGE FLOW | | | |
|---|---|---|---|---|---|
| | | 6-HR | 24-HR | 72-HR | 29.90-HR |
| (CFS) | (HR) | | | | |
| | | (CFS) | | | |
| 13. | 12.20 | 1. | 0. | 0. | 0. |
| | | (INCHES) 1.846 | 1.846 | 1.846 | 1.846 |
| | | (AC-FT) 1. | 1. | 1. | 1. |

CUMULATIVE AREA = 0.01 SQ MI

*** *** *** *** ***

DIVERSION HYDROGRAPH PERC5A
FOR PLAN 1, RATIO = 5.10

| PEAK FLOW | TIME | MAXIMUM AVERAGE FLOW | | | |
|---|---|---|---|---|---|
| | | 6-HR | 24-HR | 72-HR | 29.90-HR |
| + (CFS) | (HR) | | | | |
| | | (CFS) | | | |
| + 0. | 10.90 | 0. | 0. | 0. | 0. |
| | | (INCHES) 0.652 | 1.138 | 1.138 | 1.138 |
| | | (AC-FT) 0. | 0. | 0. | 0. |

CUMULATIVE AREA = 0.01 SQ MI

*** *** *** *** ***

HYDROGRAPH AT STATION SUB5A
FOR PLAN 1, RATIO = 5.10

| PEAK FLOW | TIME | MAXIMUM AVERAGE FLOW | | | |
|---|---|---|---|---|---|
| | | 6-HR | 24-HR | 72-HR | 29.90-HR |
| + (CFS) | (HR) | | | | |
| | | (CFS) | | | |
| + 16. | 12.20 | 2. | 0. | 0. | 0. |
| | | (INCHES) 2.325 | 2.326 | 2.326 | 2.326 |
| | | (AC-FT) 1. | 1. | 1. | 1. |

CUMULATIVE AREA = 0.01 SQ MI

*** *** *** *** ***

DIVERSION HYDROGRAPH PERC5A
FOR PLAN 1, RATIO = 6.00

| PEAK FLOW | TIME | MAXIMUM AVERAGE FLOW | | | |
|---|---|---|---|---|---|
| | | 6-HR | 24-HR | 72-HR | 29.90-HR |
| + (CFS) | (HR) | | | | |
| | | (CFS) | | | |
| + 0. | 10.40 | 0. | 0. | 0. | 0. |
| | | (INCHES) 0.652 | 1.284 | 1.284 | 1.284 |
| | | (AC-FT) 0. | 0. | 0. | 0. |

CUMULATIVE AREA = 0.01 SQ MI

*** *** *** *** ***

HYDROGRAPH AT STATION SUB5A
FOR PLAN 1, RATIO = 6.00

| PEAK FLOW | TIME | MAXIMUM AVERAGE FLOW | | | |
|---|---|---|---|---|---|
| | | 6-HR | 24-HR | 72-HR | 29.90-HR |
| + (CFS) | (HR) | | | | |
| | | (CFS) | | | |
| + 19. | 12.20 | 2. | 1. | 0. | 0. |
| | | (INCHES) 3.039 | 3.062 | 3.062 | 3.062 |
| | | (AC-FT) 1. | 1. | 1. | 1. |

CUMULATIVE AREA = 0.01 SQ MI

*** *** *** *** ***

DIVERSION HYDROGRAPH PERC5A
FOR PLAN 1, RATIO = 9.00

| PEAK FLOW | TIME | MAXIMUM AVERAGE FLOW | | | |
|---|---|---|---|---|---|
| | | 6-HR | 24-HR | 72-HR | 29.90-HR |
| + (CFS) | (HR) | | | | |
| | | (CFS) | | | |
| + 0. | 8.70 | 0. | 0. | 0. | 0. |
| | | (INCHES) 0.652 | 1.631 | 1.631 | 1.631 |
| | | (AC-FT) 0. | 1. | 1. | 1. |

CUMULATIVE AREA = 0.01 SQ MI

*** *** *** *** ***

HYDROGRAPH AT STATION SUB5A
FOR PLAN 1, RATIO = 9.00

| PEAK FLOW | TIME | MAXIMUM AVERAGE FLOW | | | |
|---|---|---|---|---|---|
| | | 6-HR | 24-HR | 72-HR | 29.90-HR |
| + (CFS) | (HR) | | | | |
| | | (CFS) | | | |
| + 31. | 12.20 | 4. | 1. | 1. | 1. |
| | | (INCHES) 5.328 | 5.681 | 5.681 | 5.681 |
| | | (AC-FT) 2. | 2. | 2. | 2. |

```
                    CUMULATIVE AREA =    0.01 SQ MI

*** *** *** *** *** *** *** *** *** *** *** *** *** *** *** *** *** *** *** *** *** *** *** *** *** *** *** *** *** *** *** *** ***

          **************
          *            *
132 KK    *    ROUT5A  *     ROUTING IN UNDERGROUND STORAGE SYSTEM FOR SITE-5A
          *            *
          **************

                    OUTLET STRUCTURE DATA: 140 STORMTECH MC-4500 UNITS
                    ******************************************************************
                    *  WEIR LENGTH = 4.71' WEIR OVERFLOW AT EL.: 366.3               *
                    *  4.5-INCH DIAMETER CPv ORIFICE AT EL.: 364.2                   *
                    ******************************************************************

              HYDROGRAPH ROUTING DATA

140 RS          STORAGE ROUTING
                     NSTPS          1  NUMBER OF SUBREACHES
                      ITYP       ELEV  TYPE OF INITIAL CONDITION
                    RSVRIC     359.00  INITIAL CONDITION
                         X       0.00 WORKING R AND D COEFFICIENT

141 SV            STORAGE        0.0       0.0       0.1       0.2       0.3       0.3       0.4       0.4       0.4

142 SE          ELEVATION     359.00    359.75    360.75    361.75    362.75    363.75    364.75    365.75    368.50

143 SQ          DISCHARGE        0.        0.        1.        1.        3.        6.        9.       13.       22.       38.

144 SE          ELEVATION     364.20    364.60    366.20    366.40    366.60    366.80    367.00    367.20    367.60    368.20

                                                                  ***

                                          COMPUTED STORAGE-OUTFLOW-ELEVATION DATA

            STORAGE       0.00      0.03      0.12      0.20      0.28      0.35      0.37      0.39      0.40      0.44
            OUTFLOW       0.00      0.00      0.00      0.00      0.00      0.00      0.00      0.25      0.29      0.59
          ELEVATION     359.00    359.75    360.75    361.75    362.75    363.75    364.20    364.60    364.75    365.75

            STORAGE       0.44      0.44      0.44      0.44      0.44      0.44      0.44      0.44      0.44
            OUTFLOW       0.73      1.21      3.13      5.84      9.15     12.97     21.91     38.06     46.13
          ELEVATION     366.20    366.40    366.60    366.80    367.00    367.20    367.60    368.20    368.50

*** WARNING *** MODIFIED PULS ROUTING MAY BE NUMERICALLY UNSTABLE FOR OUTFLOWS BETWEEN        1. TO       46.
                THE ROUTED HYDROGRAPH SHOULD BE EXAMINED FOR OSCILLATIONS OR OUTFLOWS GREATER THAN PEAK INFLOWS.
                THIS CAN BE CORRECTED BY DECREASING THE TIME INTERVAL OR INCREASING STORAGE (USE A LONGER REACH.)

      ***             ***             ***             ***             ***

                        HYDROGRAPH AT STATION   ROUT5A
                          FOR PLAN 1, RATIO = 2.80

  PEAK FLOW     TIME                          MAXIMUM AVERAGE FLOW
                                    6-HR       24-HR       72-HR     29.90-HR
+   (CFS)       (HR)
                          (CFS)
+       0.      0.10                  0.          0.          0.          0.
                       (INCHES)    0.000       0.000       0.000       0.000
                        (AC-FT)       0.          0.          0.          0.

 PEAK STORAGE   TIME                         MAXIMUM AVERAGE STORAGE
                                    6-HR       24-HR       72-HR     29.90-HR
+  (AC-FT)      (HR)
        0.     16.00                  0.          0.          0.          0.

  PEAK STAGE    TIME                          MAXIMUM AVERAGE STAGE
                                    6-HR       24-HR       72-HR     29.90-HR
+   (FEET)      (HR)
    361.74     16.10               361.74      361.00      360.61      360.61

                        CUMULATIVE AREA =    0.01 SQ MI

      ***             ***             ***             ***             ***

                        HYDROGRAPH AT STATION   ROUT5A
                          FOR PLAN 1, RATIO = 3.50

  PEAK FLOW     TIME                          MAXIMUM AVERAGE FLOW
                                    6-HR       24-HR       72-HR     29.90-HR
+   (CFS)       (HR)
                          (CFS)
+       0.     15.20                  0.          0.          0.          0.
                       (INCHES)    0.033       0.033       0.033       0.033
                        (AC-FT)       0.          0.          0.          0.

 PEAK STORAGE   TIME                         MAXIMUM AVERAGE STORAGE
```

| | | 6-HR | 24-HR | 72-HR | 29.90-HR |
|---|---|---|---|---|---|
| + (AC-FT) | (HR) | | | | |
| 0. | 14.80 | 0. | 0. | 0. | 0. |

| PEAK STAGE | TIME | MAXIMUM AVERAGE STAGE | | | |
|---|---|---|---|---|---|
| | | 6-HR | 24-HR | 72-HR | 29.90-HR |
| + (FEET) | (HR) | | | | |
| 364.29 | 16.10 | 364.24 | 362.79 | 362.04 | 362.04 |

CUMULATIVE AREA = 0.01 SQ MI

*** *** *** *** ***

HYDROGRAPH AT STATION ROUT5A
FOR PLAN 1, RATIO = 4.50

| PEAK FLOW | TIME | MAXIMUM AVERAGE FLOW | | | |
|---|---|---|---|---|---|
| | | 6-HR | 24-HR | 72-HR | 29.90-HR |
| + (CFS) | (HR) | | | | |
| | | (CFS) | | | |
| + 3. | 12.50 | 0. | 0. | 0. | 0. |
| | | (INCHES) 0.585 | 0.585 | 0.585 | 0.585 |
| | | (AC-FT) 0. | 0. | 0. | 0. |

| PEAK STORAGE | TIME | MAXIMUM AVERAGE STORAGE | | | |
|---|---|---|---|---|---|
| | | 6-HR | 24-HR | 72-HR | 29.90-HR |
| + (AC-FT) | (HR) | | | | |
| 0. | 12.50 | 0. | 0. | 0. | 0. |

| PEAK STAGE | TIME | MAXIMUM AVERAGE STAGE | | | |
|---|---|---|---|---|---|
| | | 6-HR | 24-HR | 72-HR | 29.90-HR |
| + (FEET) | (HR) | | | | |
| 366.85 | 12.50 | 366.63 | 364.62 | 363.51 | 363.51 |

CUMULATIVE AREA = 0.01 SQ MI

*** *** *** *** ***

HYDROGRAPH AT STATION ROUT5A
FOR PLAN 1, RATIO = 5.10

| PEAK FLOW | TIME | MAXIMUM AVERAGE FLOW | | | |
|---|---|---|---|---|---|
| | | 6-HR | 24-HR | 72-HR | 29.90-HR |
| + (CFS) | (HR) | | | | |
| | | (CFS) | | | |
| + 12. | 12.30 | 1. | 0. | 0. | 0. |
| | | (INCHES) 1.018 | 1.018 | 1.018 | 1.018 |
| | | (AC-FT) 0. | 0. | 0. | 0. |

| PEAK STORAGE | TIME | MAXIMUM AVERAGE STORAGE | | | |
|---|---|---|---|---|---|
| | | 6-HR | 24-HR | 72-HR | 29.90-HR |
| + (AC-FT) | (HR) | | | | |
| 0. | 12.50 | 0. | 0. | 0. | 0. |

| PEAK STAGE | TIME | MAXIMUM AVERAGE STAGE | | | |
|---|---|---|---|---|---|
| | | 6-HR | 24-HR | 72-HR | 29.90-HR |
| + (FEET) | (HR) | | | | |
| 367.11 | 12.50 | 366.90 | 364.85 | 363.70 | 363.70 |

CUMULATIVE AREA = 0.01 SQ MI

*** *** *** *** ***

HYDROGRAPH AT STATION ROUT5A
FOR PLAN 1, RATIO = 6.00

| PEAK FLOW | TIME | MAXIMUM AVERAGE FLOW | | | |
|---|---|---|---|---|---|
| | | 6-HR | 24-HR | 72-HR | 29.90-HR |
| + (CFS) | (HR) | | | | |
| | | (CFS) | | | |
| + 19. | 12.20 | 1. | 0. | 0. | 0. |
| | | (INCHES) 1.760 | 1.760 | 1.760 | 1.760 |
| | | (AC-FT) 1. | 1. | 1. | 1. |

| PEAK STORAGE | TIME | MAXIMUM AVERAGE STORAGE | | | |
|---|---|---|---|---|---|
| | | 6-HR | 24-HR | 72-HR | 29.90-HR |
| + (AC-FT) | (HR) | | | | |
| 0. | 12.50 | 0. | 0. | 0. | 0. |

| PEAK STAGE | TIME | MAXIMUM AVERAGE STAGE | | | |
|---|---|---|---|---|---|
| | | 6-HR | 24-HR | 72-HR | 29.90-HR |
| + (FEET) | (HR) | | | | |
| 367.13 | 12.50 | 366.89 | 364.88 | 363.72 | 363.72 |

CUMULATIVE AREA = 0.01 SQ MI

*** *** *** *** ***

HYDROGRAPH AT STATION ROUT5A
FOR PLAN 1, RATIO = 9.00

```
  PEAK FLOW     TIME                          MAXIMUM AVERAGE FLOW
                                      6-HR       24-HR       72-HR      29.90-HR
+   (CFS)       (HR)
                          (CFS)
+      31.     12.20                   3.          1.          1.           1.
                        (INCHES)    4.459       4.644       4.644        4.644
                         (AC-FT)       2.          2.          2.           2.

 PEAK STORAGE   TIME                          MAXIMUM AVERAGE STORAGE
                                      6-HR       24-HR       72-HR      29.90-HR
+  (AC-FT)      (HR)
        0.     12.00                   0.          0.          0.           0.

  PEAK STAGE    TIME                          MAXIMUM AVERAGE STAGE
                                      6-HR       24-HR       72-HR      29.90-HR
+   (FEET)      (HR)
    367.92     12.20                 366.24      363.66      362.74       362.74

                         CUMULATIVE AREA =    0.01 SQ MI


*** *** *** *** *** *** *** *** *** *** *** *** *** *** *** *** *** *** *** *** *** *** *** *** *** *** *** *** *** *** *** ***

            **************
            *            *
  145 KK    *     PT.A   *     ADD SITE-3A, SITE-4 AND SITE5A HYDROGRAPHS
            *            *
            **************

  146 HC          HYDROGRAPH COMBINATION
                       ICOMP           3  NUMBER OF HYDROGRAPHS TO COMBINE

                                                                  ***

      ***             ***             ***             ***             ***

                         HYDROGRAPH AT STATION     PT.A
                           FOR PLAN 1, RATIO = 2.80

  PEAK FLOW     TIME                          MAXIMUM AVERAGE FLOW
                                      6-HR       24-HR       72-HR      29.90-HR
+   (CFS)       (HR)
                          (CFS)
+       4.     12.20                   1.          0.          0.           0.
                        (INCHES)    0.408       0.486       0.486        0.486
                         (AC-FT)       0.          0.          0.           0.

                         CUMULATIVE AREA =    0.01 SQ MI

      ***             ***             ***             ***             ***

                         HYDROGRAPH AT STATION     PT.A
                           FOR PLAN 1, RATIO = 3.50

  PEAK FLOW     TIME                          MAXIMUM AVERAGE FLOW
                                      6-HR       24-HR       72-HR      29.90-HR
+   (CFS)       (HR)
                          (CFS)
+       7.     12.20                   1.          0.          0.           0.
                        (INCHES)    0.666       0.778       0.778        0.778
                         (AC-FT)       0.          1.          1.           1.

                         CUMULATIVE AREA =    0.01 SQ MI

      ***             ***             ***             ***             ***

                         HYDROGRAPH AT STATION     PT.A
                           FOR PLAN 1, RATIO = 4.50

  PEAK FLOW     TIME                          MAXIMUM AVERAGE FLOW
                                      6-HR       24-HR       72-HR      29.90-HR
+   (CFS)       (HR)
                          (CFS)
+      10.     12.20                   2.          1.          0.           0.
                        (INCHES)    1.304       1.479       1.479        1.479
                         (AC-FT)       1.          1.          1.           1.

                         CUMULATIVE AREA =    0.01 SQ MI

      ***             ***             ***             ***             ***

                         HYDROGRAPH AT STATION     PT.A
                           FOR PLAN 1, RATIO = 5.10

  PEAK FLOW     TIME                          MAXIMUM AVERAGE FLOW
                                      6-HR       24-HR       72-HR      29.90-HR
+   (CFS)       (HR)
                          (CFS)
+      23.     12.30                   2.          1.          1.           1.
```

| | | | | | |
|---|---|---|---|---|---|
| | (INCHES) | 1.743 | 1.961 | 1.961 | 1.961 |
| | (AC-FT) | 1. | 1. | 1. | 1. |

CUMULATIVE AREA = 0.01 SQ MI

*** *** *** *** ***

HYDROGRAPH AT STATION PT.A
FOR PLAN 1, RATIO = 6.00

| PEAK FLOW | TIME | MAXIMUM AVERAGE FLOW | | | |
|---|---|---|---|---|---|
| | | 6-HR | 24-HR | 72-HR | 29.90-HR |
| + (CFS) | (HR) | | | | |
| | | (CFS) | | | |
| + 35. | 12.20 | 3. | 1. | 1. | 1. |
| | (INCHES) | 2.445 | 2.739 | 2.739 | 2.739 |
| | (AC-FT) | 2. | 2. | 2. | 2. |

CUMULATIVE AREA = 0.01 SQ MI

*** *** *** *** ***

HYDROGRAPH AT STATION PT.A
FOR PLAN 1, RATIO = 9.00

| PEAK FLOW | TIME | MAXIMUM AVERAGE FLOW | | | |
|---|---|---|---|---|---|
| | | 6-HR | 24-HR | 72-HR | 29.90-HR |
| + (CFS) | (HR) | | | | |
| | | (CFS) | | | |
| + 57. | 12.20 | 7. | 2. | 2. | 2. |
| | (INCHES) | 4.830 | 5.592 | 5.592 | 5.592 |
| | (AC-FT) | 3. | 4. | 4. | 4. |

CUMULATIVE AREA = 0.01 SQ MI

*** *** *** *

| PEAK FLOW | TIME | | MAXIMUM AVERAGE FLOW | | | |
|---|---|---|---|---|---|---|
| | | | 6-HR | 24-HR | 72-HR | 29.90-HR |
| + (CFS) | (HR) | | | | | |
| | | (CFS) | | | | |
| + 0. | 11.90 | | 0. | 0. | 0. | 0. |
| | | (INCHES) | 0.242 | 0.355 | 0.355 | 0.355 |
| | | (AC-FT) | 0. | 0. | 0. | 0. |

CUMULATIVE AREA = 0.01 SQ MI

*** *** *** *** ***

HYDROGRAPH AT STATION SUBA
FOR PLAN 1, RATIO = 3.50

| PEAK FLOW | TIME | | MAXIMUM AVERAGE FLOW | | | |
|---|---|---|---|---|---|---|
| | | | 6-HR | 24-HR | 72-HR | 29.90-HR |
| + (CFS) | (HR) | | | | | |
| | | (CFS) | | | | |
| + 6. | 12.20 | | 1. | 0. | 0. | 0. |
| | | (INCHES) | 0.424 | 0.424 | 0.424 | 0.424 |
| | | (AC-FT) | 0. | 0. | 0. | 0. |

CUMULATIVE AREA = 0.01 SQ MI

*** *** *** *** ***

DIVERSION HYDROGRAPH PERCA
FOR PLAN 1, RATIO = 4.50

| PEAK FLOW | TIME | | MAXIMUM AVERAGE FLOW | | | |
|---|---|---|---|---|---|---|
| | | | 6-HR | 24-HR | 72-HR | 29.90-HR |
| + (CFS) | (HR) | | | | | |
| | | (CFS) | | | | |
| + 0. | 11.40 | | 0. | 0. | 0. | 0. |
| | | (INCHES) | 0.255 | 0.429 | 0.429 | 0.429 |
| | | (AC-FT) | 0. | 0. | 0. | 0. |

CUMULATIVE AREA = 0.01 SQ MI

*** *** *** *** ***

HYDROGRAPH AT STATION SUBA
FOR PLAN 1, RATIO = 4.50

| PEAK FLOW | TIME | | MAXIMUM AVERAGE FLOW | | | |
|---|---|---|---|---|---|---|
| | | | 6-HR | 24-HR | 72-HR | 29.90-HR |
| + (CFS) | (HR) | | | | | |
| | | (CFS) | | | | |
| + 10. | 12.20 | | 2. | 0. | 0. | 0. |
| | | (INCHES) | 1.049 | 1.049 | 1.049 | 1.049 |
| | | (AC-FT) | 1. | 1. | 1. | 1. |

CUMULATIVE AREA = 0.01 SQ MI

*** *** *** *** ***

DIVERSION HYDROGRAPH PERCA
FOR PLAN 1, RATIO = 5.10

| PEAK FLOW | TIME | | MAXIMUM AVERAGE FLOW | | | |
|---|---|---|---|---|---|---|
| | | | 6-HR | 24-HR | 72-HR | 29.90-HR |
| + (CFS) | (HR) | | | | | |
| | | (CFS) | | | | |
| + 0. | 11.00 | | 0. | 0. | 0. | 0. |
| | | (INCHES) | 0.258 | 0.475 | 0.475 | 0.475 |
| | | (AC-FT) | 0. | 0. | 0. | 0. |

CUMULATIVE AREA = 0.01 SQ MI

*** *** *** *** ***

HYDROGRAPH AT STATION SUBA
FOR PLAN 1, RATIO = 5.10

| PEAK FLOW | TIME | | MAXIMUM AVERAGE FLOW | | | |
|---|---|---|---|---|---|---|
| | | | 6-HR | 24-HR | 72-HR | 29.90-HR |
| + (CFS) | (HR) | | | | | |
| | | (CFS) | | | | |
| + 22. | 12.30 | | 2. | 1. | 0. | 0. |
| | | (INCHES) | 1.485 | 1.485 | 1.485 | 1.485 |
| | | (AC-FT) | 1. | 1. | 1. | 1. |

CUMULATIVE AREA = 0.01 SQ MI

*** *** *** *** ***

DIVERSION HYDROGRAPH PERCA
FOR PLAN 1, RATIO = 6.00

| PEAK FLOW | TIME | | MAXIMUM AVERAGE FLOW | | | |
|---|---|---|---|---|---|---|
| | | | 6-HR | 24-HR | 72-HR | 29.90-HR |
| + (CFS) | (HR) | | | | | |
| | | (CFS) | | | | |
| + 0. | 10.50 | | 0. | 0. | 0. | 0. |
| | | (INCHES) | 0.259 | 0.536 | 0.536 | 0.536 |
| | | (AC-FT) | 0. | 0. | 0. | 0. |

CUMULATIVE AREA = 0.01 SQ MI

*** *** *** *** ***

HYDROGRAPH AT STATION SUBA
FOR PLAN 1, RATIO = 6.00

| PEAK FLOW | TIME | | MAXIMUM AVERAGE FLOW | | | |
|---|---|---|---|---|---|---|
| | | | 6-HR | 24-HR | 72-HR | 29.90-HR |
| + (CFS) | (HR) | | | | | |
| | | (CFS) | | | | |
| + 35. | 12.20 | | 3. | 1. | 1. | 1. |
| | | (INCHES) | 2.187 | 2.203 | 2.203 | 2.203 |
| | | (AC-FT) | 2. | 2. | 2. | 2. |

CUMULATIVE AREA = 0.01 SQ MI

*** *** *** *** ***

DIVERSION HYDROGRAPH PERCA
FOR PLAN 1, RATIO = 9.00

| PEAK FLOW | TIME | | MAXIMUM AVERAGE FLOW | | | |
|---|---|---|---|---|---|---|
| | | | 6-HR | 24-HR | 72-HR | 29.90-HR |
| + (CFS) | (HR) | | | | | |
| | | (CFS) | | | | |
| + 0. | 9.00 | | 0. | 0. | 0. | 0. |
| | | (INCHES) | 0.259 | 0.671 | 0.671 | 0.671 |
| | | (AC-FT) | 0. | 0. | 0. | 0. |

CUMULATIVE AREA = 0.01 SQ MI

*** *** *** *** ***

HYDROGRAPH AT STATION SUBA
FOR PLAN 1, RATIO = 9.00

| PEAK FLOW | TIME | | MAXIMUM AVERAGE FLOW | | | |
|---|---|---|---|---|---|---|
| | | | 6-HR | 24-HR | 72-HR | 29.90-HR |
| + (CFS) | (HR) | | | | | |
| | | (CFS) | | | | |
| + 57. | 12.20 | | 7. | 2. | 1. | 1. |
| | | (INCHES) | 4.572 | 4.922 | 4.922 | 4.922 |
| | | (AC-FT) | 3. | 3. | 3. | 3. |

CUMULATIVE AREA = 0.01 SQ MI

*** *** *** *

***

COMPUTED STORAGE-OUTFLOW-ELEVATION DATA

| | | | | | | | | | | |
|---|---|---|---|---|---|---|---|---|---|---|
| STORAGE | 0.00 | 0.09 | 0.19 | 0.26 | 0.45 | 0.76 | 0.79 | 1.08 | 1.14 | 1.38 |
| OUTFLOW | 0.00 | 0.00 | 0.00 | 0.10 | 0.29 | 0.60 | 1.31 | 2.54 | 3.52 | 15.26 |
| ELEVATION | 350.00 | 350.50 | 351.50 | 351.90 | 353.00 | 354.80 | 355.00 | 356.00 | 356.20 | 357.00 |

| | | | | | |
|---|---|---|---|---|---|
| STORAGE | 1.50 | 1.53 | 1.54 | 1.54 | 1.54 |
| OUTFLOW | 29.93 | 37.92 | 41.05 | 50.45 | 65.63 |
| ELEVATION | 358.00 | 358.20 | 358.25 | 358.40 | 358.60 |

*** WARNING *** MODIFIED PULS ROUTING MAY BE NUMERICALLY UNSTABLE FOR OUTFLOWS BETWEEN 30. TO 66.
THE ROUTED HYDROGRAPH SHOULD BE EXAMINED FOR OSCILLATIONS OR OUTFLOWS GREATER THAN PEAK INFLOWS.
THIS CAN BE CORRECTED BY DECREASING THE TIME INTERVAL OR INCREASING STORAGE (USE A LONGER REACH.)

*** *** *** *** ***

HYDROGRAPH AT STATION ROUTA
FOR PLAN 1, RATIO = 2.80

| PEAK FLOW | TIME | | MAXIMUM AVERAGE FLOW | | | |
|---|---|---|---|---|---|---|
| | | | 6-HR | 24-HR | 72-HR | 29.90-HR |
| + (CFS) | (HR) | | | | | |
| | | (CFS) | | | | |
| + 0. | 0.10 | | 0. | 0. | 0. | 0. |
| | | (INCHES) | 0.000 | 0.000 | 0.000 | 0.000 |
| | | (AC-FT) | 0. | 0. | 0. | 0. |

| PEAK STORAGE | TIME | MAXIMUM AVERAGE STORAGE | | | |
|---|---|---|---|---|---|
| | | 6-HR | 24-HR | 72-HR | 29.90-HR |
| + (AC-FT) | (HR) | | | | |
| 0. | 14.40 | 0. | 0. | 0. | 0. |

| PEAK STAGE | TIME | MAXIMUM AVERAGE STAGE | | | |
|---|---|---|---|---|---|
| | | 6-HR | 24-HR | 72-HR | 29.90-HR |
| + (FEET) | (HR) | | | | |
| 351.04 | 16.10 | 351.04 | 350.75 | 350.61 | 350.61 |

CUMULATIVE AREA = 0.01 SQ MI

*** *** *** *** ***

HYDROGRAPH AT STATION ROUTA
FOR PLAN 1, RATIO = 3.50

| PEAK FLOW | TIME | | MAXIMUM AVERAGE FLOW | | | |
|---|---|---|---|---|---|---|
| | | | 6-HR | 24-HR | 72-HR | 29.90-HR |
| + (CFS) | (HR) | | | | | |
| | | (CFS) | | | | |
| + 0. | 14.80 | | 0. | 0. | 0. | 0. |
| | | (INCHES) | 0.070 | 0.134 | 0.134 | 0.134 |
| | | (AC-FT) | 0. | 0. | 0. | 0. |

| PEAK STORAGE | TIME | MAXIMUM AVERAGE STORAGE | | | |
|---|---|---|---|---|---|
| | | 6-HR | 24-HR | 72-HR | 29.90-HR |
| + (AC-FT) | (HR) | | | | |
| 0. | 14.80 | 0. | 0. | 0. | 0. |

| PEAK STAGE | TIME | MAXIMUM AVERAGE STAGE | | | |
|---|---|---|---|---|---|
| | | 6-HR | 24-HR | 72-HR | 29.90-HR |
| + (FEET) | (HR) | | | | |
| 351.97 | 15.30 | 351.92 | 351.30 | 351.05 | 351.05 |

CUMULATIVE AREA = 0.01 SQ MI

*** *** *** *** ***

HYDROGRAPH AT STATION ROUTA
FOR PLAN 1, RATIO = 4.50

| PEAK FLOW | TIME | | MAXIMUM AVERAGE FLOW | | | |
|---|---|---|---|---|---|---|
| | | | 6-HR | 24-HR | 72-HR | 29.90-HR |
| + (CFS) | (HR) | | | | | |
| | | (CFS) | | | | |
| + 0. | 14.80 | | 0. | 0. | 0. | 0. |
| | | (INCHES) | 0.292 | 0.612 | 0.612 | 0.612 |
| | | (AC-FT) | 0. | 0. | 0. | 0. |

| PEAK STORAGE | TIME | MAXIMUM AVERAGE STORAGE | | | |
|---|---|---|---|---|---|
| | | 6-HR | 24-HR | 72-HR | 29.90-HR |
| + (AC-FT) | (HR) | | | | |
| 1. | 14.80 | 1. | 0. | 0. | 0. |

| PEAK STAGE | TIME | MAXIMUM AVERAGE STAGE | | | |
|---|---|---|---|---|---|
| | | 6-HR | 24-HR | 72-HR | 29.90-HR |
| + (FEET) | (HR) | | | | |
| 353.94 | 15.20 | 353.75 | 352.26 | 351.81 | 351.81 |

CUMULATIVE AREA = 0.01 SQ MI

```
      ***            ***            ***            ***            ***

                        HYDROGRAPH AT STATION    ROUTA
                          FOR PLAN 1, RATIO = 5.10

  PEAK FLOW     TIME                          MAXIMUM AVERAGE FLOW
                                     6-HR       24-HR       72-HR     29.90-HR
+   (CFS)       (HR)
                          (CFS)
+       1.     13.90                   1.          0.          0.          0.
                        (INCHES)     0.535       0.977       0.977       0.977
                         (AC-FT)       0.          1.          1.          1.

 PEAK STORAGE   TIME                          MAXIMUM AVERAGE STORAGE
                                     6-HR       24-HR       72-HR     29.90-HR
+  (AC-FT)      (HR)
        1.     13.90                   1.          0.          0.          0.

  PEAK STAGE    TIME                          MAXIMUM AVERAGE STAGE
                                     6-HR       24-HR       72-HR     29.90-HR
+   (FEET)      (HR)
    355.00     13.90               354.72      352.76      352.21      352.21

                        CUMULATIVE AREA =    0.01 SQ MI


      ***            ***            ***            ***            ***

                        HYDROGRAPH AT STATION    ROUTA
                          FOR PLAN 1, RATIO = 6.00

  PEAK FLOW     TIME                          MAXIMUM AVERAGE FLOW
                                     6-HR       24-HR       72-HR     29.90-HR
+   (CFS)       (HR)
                          (CFS)
+       2.     13.40                   2.          1.          0.          0.
                        (INCHES)     1.177       1.670       1.670       1.670
                         (AC-FT)       1.          1.          1.          1.

 PEAK STORAGE   TIME                          MAXIMUM AVERAGE STORAGE
                                     6-HR       24-HR       72-HR     29.90-HR
+  (AC-FT)      (HR)
        1.     13.40                   1.          0.          0.          0.

  PEAK STAGE    TIME                          MAXIMUM AVERAGE STAGE
                                     6-HR       24-HR       72-HR     29.90-HR
+   (FEET)      (HR)
    355.86     13.40               355.36      353.03      352.43      352.43

                        CUMULATIVE AREA =    0.01 SQ MI


      ***            ***            ***            ***            ***

                        HYDROGRAPH AT STATION    ROUTA
                          FOR PLAN 1, RATIO = 9.00

  PEAK FLOW     TIME                          MAXIMUM AVERAGE FLOW
                                     6-HR       24-HR       72-HR     29.90-HR
+   (CFS)       (HR)
                          (CFS)
+      36.     12.40                   5.          2.          1.          1.
                        (INCHES)     3.559       4.307       4.307       4.307
                         (AC-FT)       3.          3.          3.          3.

 PEAK STORAGE   TIME                          MAXIMUM AVERAGE STORAGE
                                     6-HR       24-HR       72-HR     29.90-HR
+  (AC-FT)      (HR)
        2.     12.40                   1.          1.          0.          0.

  PEAK STAGE    TIME                          MAXIMUM AVERAGE STAGE
                                     6-HR       24-HR       72-HR     29.90-HR
+   (FEET)      (HR)
    358.16     12.40               356.07      353.55      352.85      352.85

                        CUMULATIVE AREA =    0.01 SQ MI


*** *** *** *** *** *** *** *** *** *** *** *** *** *** *** *** *** *** *** *** *** *** *** *** *** *** *** *** *** *** *** *** *** ***


            **************
            *            *
 165 KK     *   SITE-3   *     SOUTHEASTERLY UNIMPROVED SITE RUNOFF TOWARD PT.3
            *            *
            **************

                        ************************************************************************
                        * DRAINAGE AREA = 0.16 AC = 0.0003 SQ. MI.      CN=70                  *
                        * TIME OF CONCENTRATION = 10 MIN = 0.167 HR x 0.6 (SCS LAG) = 0.100    *
                        ************************************************************************
```

SUBBASIN RUNOFF DATA

172 BA SUBBASIN CHARACTERISTICS
TAREA 0.00 SUBBASIN AREA

PRECIPITATION DATA

35 PB STORM 1.00 BASIN TOTAL PRECIPITATION

37 PI INCREMENTAL PRECIPITATION PATTERN

| | | | | | | | | | |
|---|---|---|---|---|---|---|---|---|---|
| 0.00 | 0.00 | 0.00 | 0.00 | 0.00 | 0.00 | 0.00 | 0.00 | 0.00 | 0.00 |

```
                    CUMULATIVE AREA =    0.00 SQ MI

      ***            ***            ***            ***            ***

                     HYDROGRAPH AT STATION   SITE-3
                       FOR PLAN 1, RATIO = 4.50

    TOTAL RAINFALL =    4.50, TOTAL LOSS =    2.93, TOTAL EXCESS =    1.57

  PEAK FLOW     TIME                          MAXIMUM AVERAGE FLOW
                                    6-HR       24-HR       72-HR     29.90-HR
+   (CFS)       (HR)
                         (CFS)
+       0.     12.30                  0.          0.          0.          0.
                       (INCHES)    1.310       1.573       1.573       1.573
                        (AC-FT)      0.          0.          0.          0.

                    CUMULATIVE AREA =    0.00 SQ MI

      ***            ***            ***            ***            ***

                     HYDROGRAPH AT STATION   SITE-3
                       FOR PLAN 1, RATIO = 5.10

    TOTAL RAINFALL =    5.10, TOTAL LOSS =    3.10, TOTAL EXCESS =    2.00

  PEAK FLOW     TIME                          MAXIMUM AVERAGE FLOW
                                    6-HR       24-HR       72-HR     29.90-HR
+   (CFS)       (HR)
                         (CFS)
+       0.     12.30                  0.          0.          0.          0.
                       (INCHES)    1.669       2.005       2.005       2.005
                        (AC-FT)      0.          0.          0.          0.

                    CUMULATIVE AREA =    0.00 SQ MI

      ***            ***            ***            ***            ***

                     HYDROGRAPH AT STATION   SITE-3
                       FOR PLAN 1, RATIO = 6.00

    TOTAL RAINFALL =    6.00, TOTAL LOSS =    3.31, TOTAL EXCESS =    2.69

  PEAK FLOW     TIME                          MAXIMUM AVERAGE FLOW
                                    6-HR       24-HR       72-HR     29.90-HR
+   (CFS)       (HR)
                         (CFS)
+       0.     12.30                  0.          0.          0.          0.
                       (INCHES)    2.236       2.692       2.692       2.692
                        (AC-FT)      0.          0.          0.          0.

                    CUMULATIVE AREA =    0.00 SQ MI

      ***            ***            ***            ***            ***

                     HYDROGRAPH AT STATION   SITE-3
                       FOR PLAN 1, RATIO = 9.00

    TOTAL RAINFALL =    9.00, TOTAL LOSS =    3.79, TOTAL EXCESS =    5.21

  PEAK FLOW     TIME                          MAXIMUM AVERAGE FLOW
                                    6-HR       24-HR       72-HR     29.90-HR
+   (CFS)       (HR)
                         (CFS)
+       1.     12.20                  0.          0.          0.          0.
                       (INCHES)    4.282       5.209       5.209       5.209
                        (AC-FT)      0.          0.          0.          0.

                    CUMULATIVE AREA =    0.00 SQ MI


*** *** *** *** *** *** *** *** *** *** *** *** *** *** *** *** *** *** *** *** *** *** *** *** *** *** *** *** *** *** *** *** *** ***


            **************
            *            *
  175 KK    *     PT.B   *     ADD ROUTE3 AND SITE-3 HYDROGRAPHS
            *            *
            **************

  176 HC          HYDROGRAPH COMBINATION
                       ICOMP          2  NUMBER OF HYDROGRAPHS TO COMBINE

                                                                  ***

      ***            ***            ***            ***            ***

                     HYDROGRAPH AT STATION     PT.B
```

FOR PLAN 1, RATIO = 2.80

| PEAK FLOW | TIME | MAXIMUM AVERAGE FLOW | | | |
|---|---|---|---|---|---|
| | | 6-HR | 24-HR | 72-HR | 29.90-HR |
| + (CFS) | (HR) | | | | |
| | | (CFS) | | | |
| + 0. | 12.30 | 0. | 0. | 0. | 0. |
| | | (INCHES) 0.010 | 0.012 | 0.012 | 0.012 |
| | | (AC-FT) 0. | 0. | 0. | 0. |

CUMULATIVE AREA = 0.01 SQ MI

*** *** *** *** ***

HYDROGRAPH AT STATION PT.B
FOR PLAN 1, RATIO = 3.50

| PEAK FLOW | TIME | MAXIMUM AVERAGE FLOW | | | |
|---|---|---|---|---|---|
| | | 6-HR | 24-HR | 72-HR | 29.90-HR |
| + (CFS) | (HR) | | | | |
| | | (CFS) | | | |
| + 0. | 12.30 | 0. | 0. | 0. | 0. |
| | | (INCHES) 0.079 | 0.151 | 0.151 | 0.151 |
| | | (AC-FT) 0. | 0. | 0. | 0. |

CUMULATIVE AREA = 0.01 SQ MI

*** *** *** *** ***

HYDROGRAPH AT STATION PT.B
FOR PLAN 1, RATIO = 4.50

| PEAK FLOW | TIME | MAXIMUM AVERAGE FLOW | | | |
|---|---|---|---|---|---|
| | | 6-HR | 24-HR | 72-HR | 29.90-HR |
| + (CFS) | (HR) | | | | |
| | | (CFS) | | | |
| + 0. | 14.70 | 0. | 0. | 0. | 0. |
| | | (INCHES) 0.299 | 0.634 | 0.634 | 0.634 |
| | | (AC-FT) 0. | 0. | 0. | 0. |

CUMULATIVE AREA = 0.01 SQ MI

*** *** *** *** ***

HYDROGRAPH AT STATION PT.B
FOR PLAN 1, RATIO = 5.10

| PEAK FLOW | TIME | MAXIMUM AVERAGE FLOW | | | |
|---|---|---|---|---|---|
| | | 6-HR | 24-HR | 72-HR | 29.90-HR |
| + (CFS) | (HR) | | | | |
| | | (CFS) | | | |
| + 1. | 13.90 | 1. | 0. | 0. | 0. |
| | | (INCHES) 0.544 | 0.999 | 0.999 | 0.999 |
| | | (AC-FT) 0. | 1. | 1. | 1. |

CUMULATIVE AREA = 0.01 SQ MI

*** *** *** *** ***

HYDROGRAPH AT STATION PT.B
FOR PLAN 1, RATIO = 6.00

| PEAK FLOW | TIME | MAXIMUM AVERAGE FLOW | | | |
|---|---|---|---|---|---|
| | | 6-HR | 24-HR | 72-HR | 29.90-HR |
| + (CFS) | (HR) | | | | |
| | | (CFS) | | | |
| + 2. | 13.40 | 2. | 1. | 0. | 0. |
| | | (INCHES) 1.189 | 1.692 | 1.692 | 1.692 |
| | | (AC-FT) 1. | 1. | 1. | 1. |

CUMULATIVE AREA = 0.01 SQ MI

*** *** *** *** ***

HYDROGRAPH AT STATION PT.B
FOR PLAN 1, RATIO = 9.00

| PEAK FLOW | TIME | MAXIMUM AVERAGE FLOW | | | |
|---|---|---|---|---|---|
| | | 6-HR | 24-HR | 72-HR | 29.90-HR |
| + (CFS) | (HR) | | | | |
| | | (CFS) | | | |
| + 37. | 12.40 | 5. | 2. | 1. | 1. |
| | | (INCHES) 3.560 | 4.327 | 4.327 | 4.327 |
| | | (AC-FT) 3. | 3. | 3. | 3. |

CUMULATIVE AREA = 0.01 SQ MI

```
*** *** *** *** *** *** *** *** *** *** *** *** *** *** *** *** *** *** *** *** *** *** *** *** *** *** *** *** *** *** *** *** *** *** ***

          **************
          *            *
177 KK    *     OFF-1  *     OFFSITE SOUTHEASTERLY RUNOFF TOWARD PT.3
          *            *
          **************

                    ************************************************************************
                    * DRAINAGE AREA = 7.85 AC = 0.0123 SQ. MI.      CN=93                  *
                    * TIME OF CONCENTRATION = 10 MIN = 0.167 HR x 0.6 (SCS LAG) = 0.100    *
                    ************************************************************************


              SUBBASIN RUNOFF DATA

184 BA          SUBBASIN CHARACTERISTICS
                      TAREA         0.01  SUBBASIN AREA

                PRECIPITATION DATA

 35 PB                STORM         1.00  BASIN TOTAL PRECIPITATION

 37 PI              INCREMENTAL PRECIPITATION PATTERN
                    0.00      0.00      0.00      0.00      0.00      0.00      0.00      0.00      0.00      0.00
                    0.00      0.00      0.00      0.00      0.00      0.00      0.00      0.00      0.00      0.00
                    0.00      0.00      0.00      0.00      0.00      0.00      0.00      0.00      0.00      0.00
                    0.00      0.00      0.00      0.00      0.00      0.00      0.00      0.00      0.00      0.00
                    0.00      0.00      0.00      0.00      0.00      0.00      0.00      0.00      0.00      0.00
                    0.00      0.00      0.00      0.00      0.00      0.00      0.00      0.00      0.00      0.00
                    0.00      0.00      0.00      0.00      0.00      0.00      0.00      0.00      0.00      0.00
                    0.00      0.00      0.00      0.00      0.00      0.00      0.00      0.00      0.00      0.00
                    0.00      0.00      0.00      0.00      0.00      0.00      0.00      0.00      0.00      0.00
                    0.00      0.00      0.00      0.00      0.00      0.00      0.00      0.00      0.00      0.00
                    0.00      0.00      0.00      0.00      0.00      0.00      0.00      0.00      0.00      0.00
                    0.00      0.01      0.00      0.01      0.00      0.01      0.01      0.01      0.01      0.01
                    0.01      0.01      0.01      0.01      0.01      0.01      0.01      0.02      0.03      0.05
                    0.08      0.08      0.05      0.03      0.02      0.01      0.01      0.01      0.01      0.01
                    0.01      0.01      0.01      0.01      0.01      0.01      0.00      0.01      0.00      0.00
                    0.00      0.00      0.00      0.00      0.00      0.00      0.00      0.00      0.00      0.00
                    0.00      0.00      0.00      0.00      0.00      0.00      0.00      0.00      0.00      0.01
                    0.00      0.00      0.00      0.00      0.00      0.00      0.00      0.00      0.00      0.00
                    0.00      0.00      0.00      0.00      0.00      0.00      0.00      0.00      0.00      0.00
                    0.00      0.00      0.00      0.00      0.00      0.00      0.00      0.00      0.00      0.00
                    0.00      0.00      0.00      0.00      0.00      0.00      0.00      0.00      0.00      0.00
                    0.00      0.00      0.00      0.00      0.00      0.00      0.00      0.00      0.00      0.00
                    0.00      0.00      0.00      0.00      0.00      0.00      0.00      0.00      0.00      0.00
                    0.00      0.00      0.00      0.00      0.00      0.00      0.00      0.00      0.00      0.00
                    0.00      0.00      0.00      0.00      0.00      0.00      0.00      0.00      0.00

185 LS          SCS LOSS RATE
                     STRTL        1.00  INITIAL ABSTRACTION
                    CRVNBR       93.00  CURVE NUMBER
                     RTIMP        0.00  PERCENT IMPERVIOUS AREA

186 UD          SCS DIMENSIONLESS UNITGRAPH
                      TLAG        0.10  LAG

                                                  ***

                                                    UNIT HYDROGRAPH
                                                  7 END-OF-PERIOD ORDINATES
                          30.       33.       11.        4.        1.        0.        0.

              TOTAL RAINFALL =    1.00, TOTAL LOSS =    1.00, TOTAL EXCESS =    0.00

  PEAK FLOW     TIME                                MAXIMUM AVERAGE FLOW
                                          6-HR       24-HR       72-HR     29.90-HR
+   (CFS)       (HR)
                          (CFS)
+       0.      0.10                         0.          0.          0.          0.
                        (INCHES)        0.000       0.000       0.000       0.000
                         (AC-FT)          0.          0.          0.          0.

                        CUMULATIVE AREA =    0.01 SQ MI


      ***             ***             ***             ***             ***

                        HYDROGRAPH AT STATION    OFF-1
                          FOR PLAN 1, RATIO = 2.80

              TOTAL RAINFALL =    2.80, TOTAL LOSS =    1.53, TOTAL EXCESS =    1.27

  PEAK FLOW     TIME                                MAXIMUM AVERAGE FLOW
                                          6-HR       24-HR       72-HR     29.90-HR
+   (CFS)       (HR)
                          (CFS)
+      10.     12.30                         1.          0.          0.          0.
                        (INCHES)        1.078       1.269       1.269       1.269
                         (AC-FT)          1.          1.          1.          1.

                        CUMULATIVE AREA =    0.01 SQ MI
```

*** *** *** *** ***

HYDROGRAPH AT STATION OFF-1
FOR PLAN 1, RATIO = 3.50

TOTAL RAINFALL = 3.50, TOTAL LOSS = 1.58, TOTAL EXCESS = 1.92

| PEAK FLOW | TIME | MAXIMUM AVERAGE FLOW | | | |
|---|---|---|---|---|---|
| | | 6-HR | 24-HR | 72-HR | 29.90-HR |
| (CFS) | (HR) | | | | |
| | | (CFS) | | | |
| 15. | 12.30 | 2. | 1. | 1. | 1. |
| | | (INCHES) 1.659 | 1.921 | 1.921 | 1.921 |
| | | (AC-FT) 1. | 1. | 1. | 1. |

CUMULATIVE AREA = 0.01 SQ MI

*** *** *** *** ***

HYDROGRAPH AT STATION OFF-1
FOR PLAN 1, RATIO = 4.50

TOTAL RAINFALL = 4.50, TOTAL LOSS = 1.62, TOTAL EXCESS = 2.88

| PEAK FLOW | TIME | MAXIMUM AVERAGE FLOW | | | |
|---|---|---|---|---|---|
| | | 6-HR | 24-HR | 72-HR | 29.90-HR |
| (CFS) | (HR) | | | | |
| | | (CFS) | | | |
| 23. | 12.20 | 3. | 1. | 1. | 1. |
| | | (INCHES) 2.484 | 2.881 | 2.881 | 2.881 |
| | | (AC-FT) 2. | 2. | 2. | 2. |

CUMULATIVE AREA = 0.01 SQ MI

*** *** *** *** ***

HYDROGRAPH AT STATION OFF-1
FOR PLAN 1, RATIO = 5.10

TOTAL RAINFALL = 5.10, TOTAL LOSS = 1.64, TOTAL EXCESS = 3.46

| PEAK FLOW | TIME | MAXIMUM AVERAGE FLOW | | | |
|---|---|---|---|---|---|
| | | 6-HR | 24-HR | 72-HR | 29.90-HR |
| (CFS) | (HR) | | | | |
| | | (CFS) | | | |
| 27. | 12.20 | 4. | 1. | 1. | 1. |
| | | (INCHES) 2.976 | 3.464 | 3.464 | 3.464 |
| | | (AC-FT) 2. | 2. | 2. | 2. |

CUMULATIVE AREA = 0.01 SQ MI

*** *** *** *** ***

HYDROGRAPH AT STATION OFF-1
FOR PLAN 1, RATIO = 6.00

TOTAL RAINFALL = 6.00, TOTAL LOSS = 1.65, TOTAL EXCESS = 4.35

| PEAK FLOW | TIME | MAXIMUM AVERAGE FLOW | | | |
|---|---|---|---|---|---|
| | | 6-HR | 24-HR | 72-HR | 29.90-HR |
| (CFS) | (HR) | | | | |
| | | (CFS) | | | |
| 33. | 12.20 | 5. | 1. | 1. | 1. |
| | | (INCHES) 3.691 | 4.346 | 4.346 | 4.346 |
| | | (AC-FT) 2. | 3. | 3. | 3. |

CUMULATIVE AREA = 0.01 SQ MI

*** *** *** *** ***

HYDROGRAPH AT STATION OFF-1
FOR PLAN 1, RATIO = 9.00

TOTAL RAINFALL = 9.00, TOTAL LOSS = 1.69, TOTAL EXCESS = 7.31

| PEAK FLOW | TIME | MAXIMUM AVERAGE FLOW | | | |
|---|---|---|---|---|---|
| | | 6-HR | 24-HR | 72-HR | 29.90-HR |
| (CFS) | (HR) | | | | |
| | | (CFS) | | | |
| 52. | 12.20 | 8. | 2. | 2. | 2. |
| | | (INCHES) 5.979 | 7.312 | 7.312 | 7.312 |
| | | (AC-FT) 4. | 5. | 5. | 5. |

CUMULATIVE AREA = 0.01 SQ MI

*** *** *** *

```
            **************
            *            *
 187 KK     *     PT.3   *     ADD PT.B AND OFF-1 HYDROGRAPHS
            *            *
            **************

 188 HC          HYDROGRAPH COMBINATION
                      ICOMP          2  NUMBER OF HYDROGRAPHS TO COMBINE

                                                                  ***

      ***            ***            ***            ***            ***

                        HYDROGRAPH AT STATION     PT.3
                          FOR PLAN 1, RATIO = 2.80

  PEAK FLOW     TIME                          MAXIMUM AVERAGE FLOW
                                     6-HR       24-HR       72-HR     29.90-HR
+   (CFS)       (HR)
                          (CFS)
+      10.     12.30                   1.          0.          0.          0.
                        (INCHES)    0.517       0.609       0.609       0.609
                         (AC-FT)       1.          1.          1.          1.

                        CUMULATIVE AREA =    0.03 SQ MI

      ***            ***            ***            ***            ***

                        HYDROGRAPH AT STATION     PT.3
                          FOR PLAN 1, RATIO = 3.50

  PEAK FLOW     TIME                          MAXIMUM AVERAGE FLOW
                                     6-HR       24-HR       72-HR     29.90-HR
+   (CFS)       (HR)
                          (CFS)
+      15.     12.30                   2.          1.          1.          1.
                        (INCHES)    0.828       0.992       0.992       0.992
                         (AC-FT)       1.          1.          1.          1.

                        CUMULATIVE AREA =    0.03 SQ MI

      ***            ***            ***            ***            ***

                        HYDROGRAPH AT STATION     PT.3
                          FOR PLAN 1, RATIO = 4.50

  PEAK FLOW     TIME                          MAXIMUM AVERAGE FLOW
                                     6-HR       24-HR       72-HR     29.90-HR
+   (CFS)       (HR)
                          (CFS)
+      23.     12.20                   4.          1.          1.          1.
                        (INCHES)    1.316       1.701       1.701       1.701
                         (AC-FT)       2.          2.          2.          2.

                        CUMULATIVE AREA =    0.03 SQ MI

      ***            ***            ***            ***            ***

                        HYDROGRAPH AT STATION     PT.3
                          FOR PLAN 1, RATIO = 5.10

  PEAK FLOW     TIME                          MAXIMUM AVERAGE FLOW
                                     6-HR       24-HR       72-HR     29.90-HR
+   (CFS)       (HR)
                          (CFS)
+      27.     12.20                   5.          2.          1.          1.
                        (INCHES)    1.663       2.170       2.170       2.170
                         (AC-FT)       2.          3.          3.          3.

                        CUMULATIVE AREA =    0.03 SQ MI

      ***            ***            ***            ***            ***

                        HYDROGRAPH AT STATION     PT.3
                          FOR PLAN 1, RATIO = 6.00

  PEAK FLOW     TIME                          MAXIMUM AVERAGE FLOW
                                     6-HR       24-HR       72-HR     29.90-HR
+   (CFS)       (HR)
                          (CFS)
+      34.     12.20                   6.          2.          2.          2.
                        (INCHES)    2.322       2.952       2.952       2.952
                         (AC-FT)       3.          4.          4.          4.

                        CUMULATIVE AREA =    0.03 SQ MI

      ***            ***            ***            ***            ***

                        HYDROGRAPH AT STATION     PT.3
                          FOR PLAN 1, RATIO = 9.00
```

```
  PEAK FLOW     TIME                          MAXIMUM AVERAGE FLOW
                                     6-HR       24-HR       72-HR     29.90-HR
+   (CFS)       (HR)
                          (CFS)
+      76.     12.30                  13.          4.          3.          3.
                        (INCHES)    4.546       5.744       5.744       5.744
                         (AC-FT)       6.          8.          8.          8.

                         CUMULATIVE AREA =    0.03 SQ MI


*** *** *** *** *** *** *** *** *** *** *** *** *** *** *** *** *** *** *** *** *** *** *** *** *** *** *** *** *** *** *** ***

            **************
            *            *
  189 KK    *   LAG-3    *     LAG PT.2 COMBINED HYDROGRAPH TO PT.4
            *            *
            **************

               HYDROGRAPH ROUTING DATA

  190 RT          TATUM OR STRADDLE-STAGGER ROUTING
                       NSTPS            0   NUMBER OF TATUM STEPS
                       NSTDL            0   NUMBER OF ORDINATES TO BE AVERAGED
                       LAG              1   NUMBER OF INTERVALS TO LAG HYDROGRAPH

                                                                  ***

      ***             ***             ***             ***             ***

                         HYDROGRAPH AT STATION    LAG-3
                           FOR PLAN 1, RATIO = 2.80

  PEAK FLOW     TIME                          MAXIMUM AVERAGE FLOW
                                     6-HR       24-HR       72-HR     29.90-HR
+   (CFS)       (HR)
                          (CFS)
+      10.     12.40                   1.          0.          0.          0.
                        (INCHES)    0.517       0.609       0.609       0.609
                         (AC-FT)       1.          1.          1.          1.

                         CUMULATIVE AREA =    0.03 SQ MI

      ***             ***             ***             ***             ***

                         HYDROGRAPH AT STATION    LAG-3
                           FOR PLAN 1, RATIO = 3.50

  PEAK FLOW     TIME                          MAXIMUM AVERAGE FLOW
                                     6-HR       24-HR       72-HR     29.90-HR
+   (CFS)       (HR)
                          (CFS)
+      15.     12.40                   2.          1.          1.          1.
                        (INCHES)    0.828       0.992       0.992       0.992
                         (AC-FT)       1.          1.          1.          1.

                         CUMULATIVE AREA =    0.03 SQ MI

      ***             ***             ***             ***             ***

                         HYDROGRAPH AT STATION    LAG-3
                           FOR PLAN 1, RATIO = 4.50

  PEAK FLOW     TIME                          MAXIMUM AVERAGE FLOW
                                     6-HR       24-HR       72-HR     29.90-HR
+   (CFS)       (HR)
                          (CFS)
+      23.     12.30                   4.          1.          1.          1.
                        (INCHES)    1.316       1.700       1.700       1.700
                         (AC-FT)       2.          2.          2.          2.

                         CUMULATIVE AREA =    0.03 SQ MI

      ***             ***             ***             ***             ***

                         HYDROGRAPH AT STATION    LAG-3
                           FOR PLAN 1, RATIO = 5.10

  PEAK FLOW     TIME                          MAXIMUM AVERAGE FLOW
                                     6-HR       24-HR       72-HR     29.90-HR
+   (CFS)       (HR)
                          (CFS)
+      27.     12.30                   5.          2.          1.          1.
                        (INCHES)    1.663       2.169       2.169       2.169
                         (AC-FT)       2.          3.          3.          3.

                         CUMULATIVE AREA =    0.03 SQ MI
```

```
      ***             ***             ***             ***             ***

                        HYDROGRAPH AT STATION    LAG-3
                          FOR PLAN 1, RATIO = 6.00

  PEAK FLOW     TIME                          MAXIMUM AVERAGE FLOW
                                    6-HR        24-HR        72-HR     29.90-HR
+   (CFS)       (HR)
                    (CFS)
+      34.     12.30                 6.           2.           2.           2.
                  (INCHES)      2.322        2.951        2.951        2.951
                   (AC-FT)        3.           4.           4.           4.

                  CUMULATIVE AREA =    0.03 SQ MI

      ***             ***             ***             ***             ***

                        HYDROGRAPH AT STATION    LAG-3
                          FOR PLAN 1, RATIO = 9.00

  PEAK FLOW     TIME                          MAXIMUM AVERAGE FLOW
                                    6-HR        24-HR        72-HR     29.90-HR
+   (CFS)       (HR)
                    (CFS)
+      76.     12.40                13.           4.           3.           3.
                  (INCHES)      4.546        5.743        5.743        5.743
                   (AC-FT)        6.           8.           8.           8.

                  CUMULATIVE AREA =    0.03 SQ MI

*** *** *** *** *** *** *** *** *** *** *** *** *** *** *** *** *** *** *** *** *** *** *** *** *** *** *** *** *** *** *** *** *** *** ***

          ***************
          *             *
191 KK    *    SITE-5   *     NORTHEASTERLY UNDEVELOPED SITE RUNOFF TOWARD PT.4
          *             *
          ***************

                  ************************************************************************
                  * DRAINAGE AREA = 3.78 AC = 0.0059 SQ. MI.      CN=73                  *
                  * TIME OF CONCENTRATION = 10 MIN = 0.167 HR x 0.6 (SCS LAG) = 0.100    *
                  ************************************************************************

              SUBBASIN RUNOFF DATA

198 BA          SUBBASIN CHARACTERISTICS
                      TAREA         0.01  SUBBASIN AREA

                PRECIPITATION DATA

 35 PB                STORM         1.00  BASIN TOTAL PRECIPITATION

 37 PI            INCREMENTAL PRECIPITATION PATTERN
                    0.00      0.00      0.00      0.00      0.00      0.00      0.00      0.00      0.00      0.00
                    0.00      0.00      0.00      0.00      0.00      0.00      0.00      0.00      0.00      0.00
                    0.00      0.00      0.00      0.00      0.00      0.00      0.00      0.00      0.00      0.00
                    0.00      0.00      0.00      0.00      0.00      0.00      0.00      0.00      0.00      0.00
                    0.00      0.00      0.00      0.00      0.00      0.00      0.00      0.00      0.00      0.00
                    0.00      0.00      0.00      0.00      0.00      0.00      0.00      0.00      0.00      0.00
                    0.00      0.00      0.00      0.00      0.00      0.00      0.00      0.00      0.00      0.00
                    0.00      0.00      0.00      0.00      0.00      0.00      0.00      0.00      0.00      0.00
                    0.00      0.00      0.00      0.00      0.00      0.00      0.00      0.00      0.00      0.00
                    0.00      0.00      0.00      0.00      0.00      0.00      0.00      0.00      0.00      0.00
                    0.00      0.00      0.00      0.00      0.00      0.00      0.00      0.00      0.00      0.00
                    0.00      0.01      0.00      0.01      0.00      0.01      0.01      0.01      0.01      0.01
                    0.01      0.01      0.01      0.01      0.01      0.01      0.01      0.02      0.03      0.05
                    0.08      0.08      0.05      0.03      0.02      0.01      0.01      0.01      0.01      0.01
                    0.01      0.01      0.01      0.01      0.01      0.01      0.00      0.01      0.00      0.00
                    0.00      0.00      0.00      0.00      0.00      0.00      0.00      0.00      0.00      0.00
                    0.00      0.00      0.00      0.00      0.00      0.00      0.00      0.00      0.00      0.01
                    0.00      0.00      0.00      0.00      0.00      0.00      0.00      0.00      0.00      0.00
                    0.00      0.00      0.00      0.00      0.00      0.00      0.00      0.00      0.00      0.00
                    0.00      0.00      0.00      0.00      0.00      0.00      0.00      0.00      0.00      0.00
                    0.00      0.00      0.00      0.00      0.00      0.00      0.00      0.00      0.00      0.00
                    0.00      0.00      0.00      0.00      0.00      0.00      0.00      0.00      0.00      0.00
                    0.00      0.00      0.00      0.00      0.00      0.00      0.00      0.00      0.00      0.00
                    0.00      0.00      0.00      0.00      0.00      0.00      0.00      0.00      0.00      0.00
                    0.00      0.00      0.00      0.00      0.00      0.00      0.00      0.00      0.00

199 LS          SCS LOSS RATE
                      STRTL         1.00  INITIAL ABSTRACTION
                     CRVNBR        73.00  CURVE NUMBER
                      RTIMP         0.00  PERCENT IMPERVIOUS AREA

200 UD          SCS DIMENSIONLESS UNITGRAPH
                      TLAG         0.10  LAG

                                                  ***
```

UNIT HYDROGRAPH
7 END-OF-PERIOD ORDINATES

14. 16. 5. 2. 1. 0. 0.

TOTAL RAINFALL = 1.00, TOTAL LOSS = 1.00, TOTAL EXCESS = 0.00

| PEAK FLOW | TIME | MAXIMUM AVERAGE FLOW | | | |
|---|---|---|---|---|---|
| | | 6-HR | 24-HR | 72-HR | 29.90-HR |
| (CFS) | (HR) | | | | |
| | | (CFS) | | | |
| 0. | 0.10 | 0. | 0. | 0. | 0. |
| | | (INCHES) 0.000 | 0.000 | 0.000 | 0.000 |
| | | (AC-FT) 0. | 0. | 0. | 0. |

CUMULATIVE AREA = 0.01 SQ MI

*** *** *** *** ***

HYDROGRAPH AT STATION SITE-5
FOR PLAN 1, RATIO = 2.80

TOTAL RAINFALL = 2.80, TOTAL LOSS = 2.21, TOTAL EXCESS = 0.59

| PEAK FLOW | TIME | MAXIMUM AVERAGE FLOW | | | |
|---|---|---|---|---|---|
| | | 6-HR | 24-HR | 72-HR | 29.90-HR |
| (CFS) | (HR) | | | | |
| | | (CFS) | | | |
| 2. | 12.30 | 0. | 0. | 0. | 0. |
| | | (INCHES) 0.478 | 0.589 | 0.589 | 0.589 |
| | | (AC-FT) 0. | 0. | 0. | 0. |

CUMULATIVE AREA = 0.01 SQ MI

*** *** *** *** ***

HYDROGRAPH AT STATION SITE-5
FOR PLAN 1, RATIO = 3.50

TOTAL RAINFALL = 3.50, TOTAL LOSS = 2.49, TOTAL EXCESS = 1.01

| PEAK FLOW | TIME | MAXIMUM AVERAGE FLOW | | | |
|---|---|---|---|---|---|
| | | 6-HR | 24-HR | 72-HR | 29.90-HR |
| (CFS) | (HR) | | | | |
| | | (CFS) | | | |
| 3. | 12.30 | 1. | 0. | 0. | 0. |
| | | (INCHES) 0.837 | 1.008 | 1.008 | 1.008 |
| | | (AC-FT) 0. | 0. | 0. | 0. |

CUMULATIVE AREA = 0.01 SQ MI

*** *** *** *** ***

HYDROGRAPH AT STATION SITE-5
FOR PLAN 1, RATIO = 4.50

TOTAL RAINFALL = 4.50, TOTAL LOSS = 2.80, TOTAL EXCESS = 1.70

| PEAK FLOW | TIME | MAXIMUM AVERAGE FLOW | | | |
|---|---|---|---|---|---|
| | | 6-HR | 24-HR | 72-HR | 29.90-HR |
| (CFS) | (HR) | | | | |
| | | (CFS) | | | |
| 6. | 12.30 | 1. | 0. | 0. | 0. |
| | | (INCHES) 1.422 | 1.702 | 1.702 | 1.702 |
| | | (AC-FT) 0. | 1. | 1. | 1. |

CUMULATIVE AREA = 0.01 SQ MI

*** *** *** *** ***

HYDROGRAPH AT STATION SITE-5
FOR PLAN 1, RATIO = 5.10

TOTAL RAINFALL = 5.10, TOTAL LOSS = 2.94, TOTAL EXCESS = 2.16

| PEAK FLOW | TIME | MAXIMUM AVERAGE FLOW | | | |
|---|---|---|---|---|---|
| | | 6-HR | 24-HR | 72-HR | 29.90-HR |
| (CFS) | (HR) | | | | |
| | | (CFS) | | | |
| 7. | 12.30 | 1. | 0. | 0. | 0. |
| | | (INCHES) 1.800 | 2.156 | 2.156 | 2.156 |
| | | (AC-FT) 1. | 1. | 1. | 1. |

CUMULATIVE AREA = 0.01 SQ MI

*** *** *** *** ***

HYDROGRAPH AT STATION SITE-5
FOR PLAN 1, RATIO = 6.00

TOTAL RAINFALL = 6.00, TOTAL LOSS = 3.13, TOTAL EXCESS = 2.87

```
  PEAK FLOW     TIME                          MAXIMUM AVERAGE FLOW
                                  6-HR        24-HR        72-HR      29.90-HR
+   (CFS)       (HR)
                  (CFS)
+      10.     12.30                2.           0.           0.           0.
                (INCHES)         2.395        2.874        2.874        2.874
                (AC-FT)             1.           1.           1.           1.

                CUMULATIVE AREA =    0.01 SQ MI


      ***            ***            ***            ***            ***

                  HYDROGRAPH AT STATION   SITE-5
                    FOR PLAN 1, RATIO = 9.00

    TOTAL RAINFALL =    9.00, TOTAL LOSS =    3.53, TOTAL EXCESS =    5.47

  PEAK FLOW     TIME                          MAXIMUM AVERAGE FLOW
                                  6-HR        24-HR        72-HR      29.90-HR
+   (CFS)       (HR)
                  (CFS)
+      19.     12.20                3.           1.           1.           1.
                (INCHES)         4.501        5.471        5.471        5.471
                (AC-FT)             1.           2.           2.           2.

                CUMULATIVE AREA =    0.01 SQ MI


*** *** *** *** *** *** *** *** *** *** *** *** *** *** *** *** *** *** *** *** *** *** *** *** *** *** *** *** *** *** *** *** *** *** ***


          **************
          *            *
201 KK    *     OFF-2  *     OFFSITE EASTERLY RUNOFF TOWARD PT.4
          *            *
          **************

                  ************************************************************************
                  * DRAINAGE AREA = 3.32 AC = 0.0052 SQ. MI.      CN=78                  *
                  * TIME OF CONCENTRATION = 10 MIN = 0.167 HR x 0.6 (SCS LAG) = 0.100    *
                  ************************************************************************


            SUBBASIN RUNOFF DATA

208 BA          SUBBASIN CHARACTERISTICS
                     TAREA        0.01  SUBBASIN AREA

                PRECIPITATION DATA

 35 PB               STORM        1.00  BASIN TOTAL PRECIPITATION

 37 PI            INCREMENTAL PRECIPITATION PATTERN
                    0.00       0.00       0.00       0.00       0.00       0.00       0.00       0.00       0.00       0.00
                    0.00       0.00       0.00       0.00       0.00       0.00       0.00       0.00       0.00       0.00
                    0.00       0.00       0.00       0.00       0.00       0.00       0.00       0.00       0.00       0.00
                    0.00       0.00       0.00       0.00       0.00       0.00       0.00       0.00       0.00       0.00
                    0.00       0.00       0.00       0.00       0.00       0.00       0.00       0.00       0.00       0.00
                    0.00       0.00       0.00       0.00       0.00       0.00       0.00       0.00       0.00       0.00
                    0.00       0.00       0.00       0.00       0.00       0.00       0.00       0.00       0.00       0.00
                    0.00       0.00       0.00       0.00       0.00       0.00       0.00       0.00       0.00       0.00
                    0.00       0.00       0.00       0.00       0.00       0.00       0.00       0.00       0.00       0.00
                    0.00       0.00       0.00       0.00       0.00       0.00       0.00       0.00       0.00       0.00
                    0.00       0.01       0.00       0.01       0.00       0.01       0.01       0.01       0.01       0.01
                    0.01       0.01       0.01       0.01       0.01       0.01       0.01       0.02       0.03       0.05
                    0.08       0.08       0.05       0.03       0.02       0.01       0.01       0.01       0.01       0.01
                    0.01       0.01       0.01       0.01       0.01       0.01       0.00       0.01       0.00       0.00
                    0.00       0.00       0.00       0.00       0.00       0.00       0.00       0.00       0.00       0.00
                    0.00       0.00       0.00       0.00       0.00       0.00       0.00       0.00       0.00       0.01
                    0.00       0.00       0.00       0.00       0.00       0.00       0.00       0.00       0.00       0.00
                    0.00       0.00       0.00       0.00       0.00       0.00       0.00       0.00       0.00       0.00
                    0.00       0.00       0.00       0.00       0.00       0.00       0.00       0.00       0.00       0.00
                    0.00       0.00       0.00       0.00       0.00       0.00       0.00       0.00       0.00       0.00
                    0.00       0.00       0.00       0.00       0.00       0.00       0.00       0.00       0.00       0.00
                    0.00       0.00       0.00       0.00       0.00       0.00       0.00       0.00       0.00       0.00
                    0.00       0.00       0.00       0.00       0.00       0.00       0.00       0.00       0.00       0.00
                    0.00       0.00       0.00       0.00       0.00       0.00       0.00       0.00       0.00

209 LS          SCS LOSS RATE
                     STRTL        1.00  INITIAL ABSTRACTION
                    CRVNBR       78.00  CURVE NUMBER
                     RTIMP        0.00  PERCENT IMPERVIOUS AREA

210 UD          SCS DIMENSIONLESS UNITGRAPH
                     TLAG        0.10  LAG

                                    ***

                                          UNIT HYDROGRAPH
                                        7 END-OF-PERIOD ORDINATES
                   13.        14.         5.         2.         1.         0.         0.
```

TOTAL RAINFALL = 1.00, TOTAL LOSS = 1.00, TOTAL EXCESS = 0.00

| PEAK FLOW | TIME | MAXIMUM AVERAGE FLOW 6-HR | 24-HR | 72-HR | 29.90-HR |
|---|---|---|---|---|---|
| (CFS) | (HR) | (CFS) | | | |
| 0. | 0.10 | 0. | 0. | 0. | 0. |
| | | (INCHES) 0.000 | 0.000 | 0.000 | 0.000 |
| | | (AC-FT) 0. | 0. | 0. | 0. |

CUMULATIVE AREA = 0.01 SQ MI

*** *** *** *** ***

HYDROGRAPH AT STATION OFF-2
FOR PLAN 1, RATIO = 2.80

TOTAL RAINFALL = 2.80, TOTAL LOSS = 2.10, TOTAL EXCESS = 0.70

| PEAK FLOW | TIME | MAXIMUM AVERAGE FLOW 6-HR | 24-HR | 72-HR | 29.90-HR |
|---|---|---|---|---|---|
| (CFS) | (HR) | (CFS) | | | |
| 2. | 12.30 | 0. | 0. | 0. | 0. |
| | | (INCHES) 0.574 | 0.701 | 0.701 | 0.701 |
| | | (AC-FT) 0. | 0. | 0. | 0. |

CUMULATIVE AREA = 0.01 SQ MI

*** *** *** *** ***

HYDROGRAPH AT STATION OFF-2
FOR PLAN 1, RATIO = 3.50

TOTAL RAINFALL = 3.50, TOTAL LOSS = 2.33, TOTAL EXCESS = 1.17

| PEAK FLOW | TIME | MAXIMUM AVERAGE FLOW 6-HR | 24-HR | 72-HR | 29.90-HR |
|---|---|---|---|---|---|
| (CFS) | (HR) | (CFS) | | | |
| 3. | 12.30 | 1. | 0. | 0. | 0. |
| | | (INCHES) 0.982 | 1.175 | 1.175 | 1.175 |
| | | (AC-FT) 0. | 0. | 0. | 0. |

CUMULATIVE AREA = 0.01 SQ MI

*** *** *** *** ***

HYDROGRAPH AT STATION OFF-2
FOR PLAN 1, RATIO = 4.50

TOTAL RAINFALL = 4.50, TOTAL LOSS = 2.56, TOTAL EXCESS = 1.94

| PEAK FLOW | TIME | MAXIMUM AVERAGE FLOW 6-HR | 24-HR | 72-HR | 29.90-HR |
|---|---|---|---|---|---|
| (CFS) | (HR) | (CFS) | | | |
| 6. | 12.30 | 1. | 0. | 0. | 0. |
| | | (INCHES) 1.630 | 1.938 | 1.938 | 1.938 |
| | | (AC-FT) 0. | 1. | 1. | 1. |

CUMULATIVE AREA = 0.01 SQ MI

*** *** *** *** ***

HYDROGRAPH AT STATION OFF-2
FOR PLAN 1, RATIO = 5.10

TOTAL RAINFALL = 5.10, TOTAL LOSS = 2.67, TOTAL EXCESS = 2.43

| PEAK FLOW | TIME | MAXIMUM AVERAGE FLOW 6-HR | 24-HR | 72-HR | 29.90-HR |
|---|---|---|---|---|---|
| (CFS) | (HR) | (CFS) | | | |
| 7. | 12.30 | 1. | 0. | 0. | 0. |
| | | (INCHES) 2.040 | 2.429 | 2.429 | 2.429 |
| | | (AC-FT) 1. | 1. | 1. | 1. |

CUMULATIVE AREA = 0.01 SQ MI

*** *** *** *** ***

HYDROGRAPH AT STATION OFF-2
FOR PLAN 1, RATIO = 6.00

TOTAL RAINFALL = 6.00, TOTAL LOSS = 2.80, TOTAL EXCESS = 3.20

| PEAK FLOW | TIME | MAXIMUM AVERAGE FLOW 6-HR | 24-HR | 72-HR | 29.90-HR |
|---|---|---|---|---|---|

```
+   (CFS)       (HR)
                          (CFS)
+      10.     12.20                  1.          0.          0.          0.
                       (INCHES)     2.678       3.197       3.197       3.197
                        (AC-FT)       1.          1.          1.          1.

                        CUMULATIVE AREA =    0.01 SQ MI


      ***            ***            ***            ***            ***

                         HYDROGRAPH AT STATION    OFF-2
                           FOR PLAN 1, RATIO = 9.00

    TOTAL RAINFALL =    9.00, TOTAL LOSS =    3.09, TOTAL EXCESS =    5.91

  PEAK FLOW     TIME                          MAXIMUM AVERAGE FLOW
                                     6-HR       24-HR       72-HR     29.90-HR
+   (CFS)       (HR)
                          (CFS)
+      18.     12.20                  3.          1.          1.          1.
                       (INCHES)     4.869       5.915       5.915       5.915
                        (AC-FT)       1.          2.          2.          2.

                        CUMULATIVE AREA =    0.01 SQ MI


*** *** *** *** *** *** *** *** *** *** *** *** *** *** *** *** *** *** *** *** *** *** *** *** *** *** *** *** *** *** *** ***


            **************
            *            *
  211 KK    *      PT.4  *     ADD LAG-3, SITE-5 AND OFF-2 HYDROGRAPHS
            *            *
            **************

  212 HC          HYDROGRAPH COMBINATION
                       ICOMP           3  NUMBER OF HYDROGRAPHS TO COMBINE

                                                                  ***

      ***            ***            ***            ***            ***

                         HYDROGRAPH AT STATION     PT.4
                           FOR PLAN 1, RATIO = 2.80

  PEAK FLOW     TIME                          MAXIMUM AVERAGE FLOW
                                     6-HR       24-HR       72-HR     29.90-HR
+   (CFS)       (HR)
                          (CFS)
+      13.     12.40                  2.          1.          0.          0.
                       (INCHES)     0.519       0.619       0.619       0.619
                        (AC-FT)       1.          1.          1.          1.

                        CUMULATIVE AREA =    0.04 SQ MI


      ***            ***            ***            ***            ***

                         HYDROGRAPH AT STATION     PT.4
                           FOR PLAN 1, RATIO = 3.50

  PEAK FLOW     TIME                          MAXIMUM AVERAGE FLOW
                                     6-HR       24-HR       72-HR     29.90-HR
+   (CFS)       (HR)
                          (CFS)
+      22.     12.30                  3.          1.          1.          1.
                       (INCHES)     0.851       1.020       1.020       1.020
                        (AC-FT)       2.          2.          2.          2.

                        CUMULATIVE AREA =    0.04 SQ MI


      ***            ***            ***            ***            ***

                         HYDROGRAPH AT STATION     PT.4
                           FOR PLAN 1, RATIO = 4.50

  PEAK FLOW     TIME                          MAXIMUM AVERAGE FLOW
                                     6-HR       24-HR       72-HR     29.90-HR
+   (CFS)       (HR)
                          (CFS)
+      34.     12.30                  5.          2.          1.          1.
                       (INCHES)     1.377       1.734       1.734       1.734
                        (AC-FT)       3.          3.          3.          3.

                        CUMULATIVE AREA =    0.04 SQ MI


      ***            ***            ***            ***            ***

                         HYDROGRAPH AT STATION     PT.4
                           FOR PLAN 1, RATIO = 5.10
```

| PEAK FLOW | TIME | | MAXIMUM AVERAGE FLOW | | | |
|---|---|---|---|---|---|---|
| | | | 6-HR | 24-HR | 72-HR | 29.90-HR |
| + (CFS) | (HR) | | | | | |
| | | (CFS) | | | | |
| + 42. | 12.30 | | 7. | 2. | 2. | 2. |
| | | (INCHES) | 1.738 | 2.203 | 2.203 | 2.203 |
| | | (AC-FT) | 3. | 4. | 4. | 4. |

CUMULATIVE AREA = 0.04 SQ MI

*** *** *** *** ***

HYDROGRAPH AT STATION PT.4
FOR PLAN 1, RATIO = 6.00

| PEAK FLOW | TIME | | MAXIMUM AVERAGE FLOW | | | |
|---|---|---|---|---|---|---|
| | | | 6-HR | 24-HR | 72-HR | 29.90-HR |
| + (CFS) | (HR) | | | | | |
| | | (CFS) | | | | |
| + 53. | 12.30 | | 9. | 3. | 2. | 2. |
| | | (INCHES) | 2.383 | 2.973 | 2.973 | 2.973 |
| | | (AC-FT) | 5. | 6. | 6. | 6. |

CUMULATIVE AREA = 0.04 SQ MI

*** *** *** *** ***

HYDROGRAPH AT STATION PT.4
FOR PLAN 1, RATIO = 9.00

| PEAK FLOW | TIME | | MAXIMUM AVERAGE FLOW | | | |
|---|---|---|---|---|---|---|
| | | | 6-HR | 24-HR | 72-HR | 29.90-HR |
| + (CFS) | (HR) | | | | | |
| | | (CFS) | | | | |
| + 103. | 12.40 | | 18. | 6. | 5. | 5. |
| | | (INCHES) | 4.582 | 5.724 | 5.724 | 5.724 |
| | | (AC-FT) | 9. | 11. | 11. | 11. |

CUMULATIVE AREA = 0.04 SQ MI

1

PEAK FLOW AND STAGE (END-OF-PERIOD) SUMMARY FOR MULTIPLE PLAN-RATIO ECONOMIC COMPUTATIONS
FLOWS IN CUBIC FEET PER SECOND, AREA IN SQUARE MILES
VOLUME IN ACRE-FEET, TIME TO PEAK IN HOURS

| | | | | | RATIOS APPLIED TO PRECIPITATION | | | | | |
|---|---|---|---|---|---|---|---|---|---|---|
| OPERATION | STATION | AREA | PLAN | | RATIO 1 | RATIO 2 | RATIO 3 | RATIO 4 | RATIO 5 | RATIO 6 |
| | | | | | 2.80 | 3.50 | 4.50 | 5.10 | 6.00 | 9.00 |
| HYDROGRAPH AT | | | | | | | | | | |
| + | SITE1A | 0.001 | 1 | FLOW | 0.62 | 0.93 | 1.31 | 1.53 | 1.83 | 2.82 |
| | | | | TIME | 12.20 | 12.20 | 12.20 | 12.20 | 12.20 | 12.20 |
| | | | | VOLUME | 0.04 | 0.07 | 0.10 | 0.12 | 0.14 | 0.24 |
| ROUTED TO | | | | | | | | | | |
| + | ROUT1A | 0.001 | 1 | FLOW | 0.01 | 0.07 | 0.54 | 1.03 | 1.65 | 2.89 |
| | | | | TIME | 19.40 | 13.90 | 12.50 | 12.30 | 12.20 | 12.20 |
| | | | | VOLUME | 0.01 | 0.03 | 0.06 | 0.08 | 0.11 | 0.20 |
| | | | ** PEAK STAGES IN FEET ** | | | | | | | |
| | | | 1 | STAGE | 365.34 | 365.51 | 366.09 | 366.16 | 366.24 | 366.36 |
| | | | | TIME | 19.60 | 13.90 | 12.50 | 12.30 | 12.20 | 12.20 |
| HYDROGRAPH AT | | | | | | | | | | |
| + | SITE-1 | 0.002 | 1 | FLOW | 0.91 | 1.76 | 3.04 | 3.83 | 5.03 | 9.03 |
| | | | | TIME | 12.20 | 12.20 | 12.20 | 12.20 | 12.20 | 12.20 |
| | | | | VOLUME | 0.09 | 0.15 | 0.24 | 0.31 | 0.40 | 0.74 |
| 2 COMBINED AT | | | | | | | | | | |
| + | PT.1 | 0.003 | 1 | FLOW | 0.91 | 1.76 | 3.04 | 4.12 | 6.68 | 11.92 |
| | | | | TIME | 12.20 | 12.20 | 12.20 | 12.30 | 12.20 | 12.20 |
| | | | | VOLUME | 0.09 | 0.18 | 0.30 | 0.38 | 0.51 | 0.94 |
| HYDROGRAPH AT | | | | | | | | | | |
| + | SITE-2 | 0.000 | 1 | FLOW | 0.22 | 0.37 | 0.57 | 0.68 | 0.84 | 1.36 |
| | | | | TIME | 12.20 | 12.20 | 12.20 | 12.20 | 12.20 | 12.20 |
| | | | | VOLUME | 0.02 | 0.03 | 0.04 | 0.05 | 0.07 | 0.11 |
| HYDROGRAPH AT | | | | | | | | | | |
| + | SITE3A | 0.004 | 1 | FLOW | 3.18 | 5.09 | 7.45 | 8.76 | 10.66 | 16.70 |
| | | | | TIME | 12.20 | 12.20 | 12.20 | 12.20 | 12.20 | 12.20 |
| | | | | VOLUME | 0.24 | 0.37 | 0.55 | 0.67 | 0.83 | 1.40 |
| HYDROGRAPH AT | | | | | | | | | | |
| + | SITE-4 | 0.003 | 1 | FLOW | 0.93 | 1.76 | 3.07 | 3.90 | 5.18 | 9.85 |
| | | | | TIME | 12.30 | 12.30 | 12.30 | 12.30 | 12.20 | 12.20 |
| | | | | VOLUME | 0.10 | 0.17 | 0.29 | 0.36 | 0.48 | 0.90 |
| HYDROGRAPH AT | | | | | | | | | | |
| + | SITE5A | 0.007 | 1 | FLOW | 5.91 | 9.48 | 13.86 | 16.30 | 19.84 | 31.08 |

| | | | | | | | | | | |
|---|---|---|---|---|---|---|---|---|---|---|
| | | | | TIME | 12.20 | 12.20 | 12.20 | 12.20 | 12.20 | 12.20 |
| | | | | VOLUME | 0.45 | 0.69 | 1.03 | 1.24 | 1.55 | 2.61 |
| DIVERSION TO | | | | | | | | | | |
| + | PERC5A | 0.007 | 1 | FLOW | 0.47 | 0.47 | 0.47 | 0.47 | 0.47 | 0.47 |
| | | | | TIME | 12.00 | 11.80 | 11.30 | 10.90 | 10.40 | 8.70 |
| | | | | VOLUME | 0.25 | 0.30 | 0.37 | 0.41 | 0.46 | 0.58 |
| HYDROGRAPH AT | | | | | | | | | | |
| + | SUB5A | 0.007 | 1 | FLOW | 5.44 | 9.01 | 13.39 | 15.83 | 19.37 | 30.61 |
| | | | | TIME | 12.20 | 12.20 | 12.20 | 12.20 | 12.20 | 12.20 |
| | | | | VOLUME | 0.20 | 0.38 | 0.66 | 0.83 | 1.09 | 2.03 |
| ROUTED TO | | | | | | | | | | |
| + | ROUT5A | 0.007 | 1 | FLOW | 0.00 | 0.06 | 3.49 | 12.01 | 19.37 | 30.61 |
| | | | | TIME | 0.10 | 15.20 | 12.50 | 12.30 | 12.20 | 12.20 |
| | | | | VOLUME | 0.00 | 0.01 | 0.21 | 0.36 | 0.63 | 1.66 |
| | | | ** | PEAK STAGES IN FEET ** | | | | | | |
| | | | 1 | STAGE | 361.74 | 364.29 | 366.85 | 367.11 | 367.13 | 367.92 |
| | | | | TIME | 16.10 | 16.10 | 12.50 | 12.50 | 12.50 | 12.20 |
| 3 COMBINED AT | | | | | | | | | | |
| + | PT.A | 0.013 | 1 | FLOW | 3.91 | 6.68 | 10.40 | 22.61 | 35.20 | 57.16 |
| | | | | TIME | 12.20 | 12.20 | 12.20 | 12.30 | 12.20 | 12.20 |
| | | | | VOLUME | 0.34 | 0.55 | 1.05 | 1.39 | 1.94 | 3.97 |
| DIVERSION TO | | | | | | | | | | |
| + | PERCA | 0.013 | 1 | FLOW | 0.37 | 0.37 | 0.37 | 0.37 | 0.37 | 0.37 |
| | | | | TIME | 12.00 | 11.90 | 11.40 | 11.00 | 10.50 | 9.00 |
| | | | | VOLUME | 0.20 | 0.25 | 0.30 | 0.34 | 0.38 | 0.48 |
| HYDROGRAPH AT | | | | | | | | | | |
| + | SUBA | 0.013 | 1 | FLOW | 3.54 | 6.31 | 10.03 | 22.24 | 34.83 | 56.79 |
| | | | | TIME | 12.20 | 12.20 | 12.20 | 12.30 | 12.20 | 12.20 |
| | | | | VOLUME | 0.14 | 0.30 | 0.74 | 1.05 | 1.56 | 3.49 |
| ROUTED TO | | | | | | | | | | |
| + | ROUTA | 0.013 | 1 | FLOW | 0.00 | 0.11 | 0.45 | 1.30 | 2.37 | 36.35 |
| | | | | TIME | 0.10 | 14.80 | 14.80 | 13.90 | 13.40 | 12.40 |
| | | | | VOLUME | 0.00 | 0.09 | 0.43 | 0.69 | 1.18 | 3.05 |
| | | | ** | PEAK STAGES IN FEET ** | | | | | | |
| | | | 1 | STAGE | 351.04 | 351.97 | 353.94 | 355.00 | 355.86 | 358.16 |
| | | | | TIME | 16.10 | 15.30 | 15.20 | 13.90 | 13.40 | 12.40 |
| HYDROGRAPH AT | | | | | | | | | | |
| + | SITE-3 | 0.000 | 1 | FLOW | 0.08 | 0.15 | 0.26 | 0.34 | 0.46 | 0.90 |
| | | | | TIME | 12.30 | 12.30 | 12.30 | 12.30 | 12.30 | 12.20 |
| | | | | VOLUME | 0.01 | 0.01 | 0.03 | 0.03 | 0.04 | 0.08 |
| 2 COMBINED AT | | | | | | | | | | |
| + | PT.B | 0.014 | 1 | FLOW | 0.08 | 0.15 | 0.47 | 1.33 | 2.43 | 37.03 |
| | | | | TIME | 12.30 | 12.30 | 14.70 | 13.90 | 13.40 | 12.40 |
| | | | | VOLUME | 0.01 | 0.11 | 0.46 | 0.72 | 1.23 | 3.14 |
| HYDROGRAPH AT | | | | | | | | | | |
| + | OFF-1 | 0.012 | 1 | FLOW | 9.62 | 15.04 | 22.65 | 26.90 | 32.99 | 52.19 |
| | | | | TIME | 12.30 | 12.30 | 12.20 | 12.20 | 12.20 | 12.20 |
| | | | | VOLUME | 0.83 | 1.26 | 1.89 | 2.27 | 2.85 | 4.80 |
| 2 COMBINED AT | | | | | | | | | | |
| + | PT.3 | 0.026 | 1 | FLOW | 9.69 | 15.19 | 22.90 | 27.30 | 33.70 | 75.67 |
| | | | | TIME | 12.30 | 12.30 | 12.20 | 12.20 | 12.20 | 12.30 |
| | | | | VOLUME | 0.84 | 1.37 | 2.35 | 3.00 | 4.08 | 7.93 |
| ROUTED TO | | | | | | | | | | |
| + | LAG-3 | 0.026 | 1 | FLOW | 9.69 | 15.19 | 22.90 | 27.30 | 33.70 | 75.67 |
| | | | | TIME | 12.40 | 12.40 | 12.30 | 12.30 | 12.30 | 12.40 |
| | | | | VOLUME | 0.84 | 1.37 | 2.35 | 3.00 | 4.08 | 7.93 |
| HYDROGRAPH AT | | | | | | | | | | |
| + | SITE-5 | 0.006 | 1 | FLOW | 1.67 | 3.22 | 5.69 | 7.26 | 9.69 | 18.68 |
| | | | | TIME | 12.30 | 12.30 | 12.30 | 12.30 | 12.30 | 12.20 |
| | | | | VOLUME | 0.19 | 0.32 | 0.54 | 0.68 | 0.90 | 1.72 |
| HYDROGRAPH AT | | | | | | | | | | |
| + | OFF-2 | 0.005 | 1 | FLOW | 1.82 | 3.41 | 5.84 | 7.34 | 9.71 | 17.98 |
| | | | | TIME | 12.30 | 12.30 | 12.30 | 12.30 | 12.20 | 12.20 |
| | | | | VOLUME | 0.19 | 0.33 | 0.54 | 0.67 | 0.89 | 1.64 |
| 3 COMBINED AT | | | | | | | | | | |
| + | PT.4 | 0.037 | 1 | FLOW | 12.85 | 21.67 | 34.43 | 41.90 | 53.01 | 102.91 |
| | | | | TIME | 12.40 | 12.30 | 12.30 | 12.30 | 12.30 | 12.40 |
| | | | | VOLUME | 1.22 | 2.01 | 3.42 | 4.35 | 5.87 | 11.29 |

*** NORMAL END OF HEC-1 ***